SAN OU

www.sanouchuck.com

2024•10

SAN OU®

CHUCK

浙江三鸥机械股份有限公司

ZHEJIANG SAN OU MACHINERY LIMITED COMPANY

2024•10

誠信·創新·敬業·責任

www.sanouchuck.com

三鸥机械
SAN OU MACHINERY

全球性夹持技术和制造专家

Global clamping technology and manufacturing expert

浙江三鸥机械股份有限公司是国家火炬计划重点高新技术企业、全国企事业知识产权工作试点单位，是世界上从事钻夹头和机床附件研发制造的主要企业之一。旗下拥有“三鸥”、“丰收”、“三钢”、“双鱼”等畅销品牌，主要产品有高端动力卡盘、精密手动卡盘及各种高端机床功能附件、扳手钻夹头、手紧钻夹头及带自锁钻夹头、自紧钻夹头等二百多个品种，产品出货量稳居世界前列。

作为全球性的夹持技术和制造专家，我们重视技术研发与创新，截至2024年7月，公司已拥有与钻夹头、卡盘相关的专利累计授权514项，其中8项美国专利，5项德国专利,16项PCT专利。技术创新的同时，我们坚持大力投入设备技改、导入自动化和TPS相结合的精益生产模式，ERP管理信息系统，SPC统计过程控制系统，IPD研发系统、MES智能制造系统和阿米巴经营管理模式等，2023年被浙江省经信厅评为了“浙江数字化工厂”，持续提升智能制造能力，提高优质生产效率。

在“以技术创新助力全球制造”的使命指引下，三鸥将持续专注夹持科技创新与制造，与全球顶级客户同步共进，共同推动全球工业升级。

ZHEJIANGSANOUMACHINERYLIMITED COMPANY is a key high-tech enterprise of the National Torch Project, a national intellectual property pilot unit, and one of the majorcompanies engaged in the development and manufacturing of drill chucks and machinery accessories in the world. Our company owns “SAN OU”, “Harvest”, “Sangang”, “Shuangyu” and other salable brands. There are over 200 varieties of main products, including high-end power chucks, precise manual chucks and a variety of high-end machineryaccessories, key type drill chucks, keyless drill chucks, keyless drill chucks with lock system, self-tighten drill chucks and so on , and our product shipments rank in the forefront of the world.

As a global clamping technology and manufacturing professional enterprise, we attach importance to technology development and innovation.By July 2024, we have possessed a total of 514 patents related to drill chucks and lathe chucks, including 8 US patents, 5 German patents and 16 PCT patents. At the same time of technological innovation, we insist on vigorously investing in the technical transformation of equipment, and introducing lean production mode combining automation and TPS, ERP management information system, SPC statistical process control system, IPD R & D system, MES intelligent manufacturing system and Amoeba operation and management mode. In 2023, our company was rated as “Zhejiang Digital Factory” by Zhejiang Economic and Information Department. We will continue to improve intelligent manufacturing capacity and increase high-quality production efficiency.

Under the guidance of the mission of “contribute to global manufacturing through technological innovation”, SANOU will continue to focus on technological innovation and manufacturing, and work together with the world’s top customers to promote global industrial upgrading.

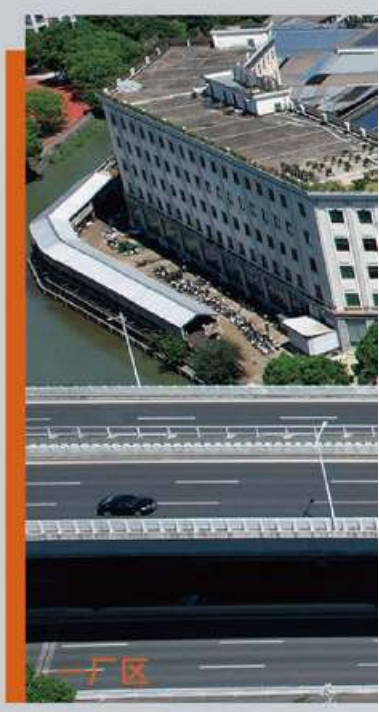



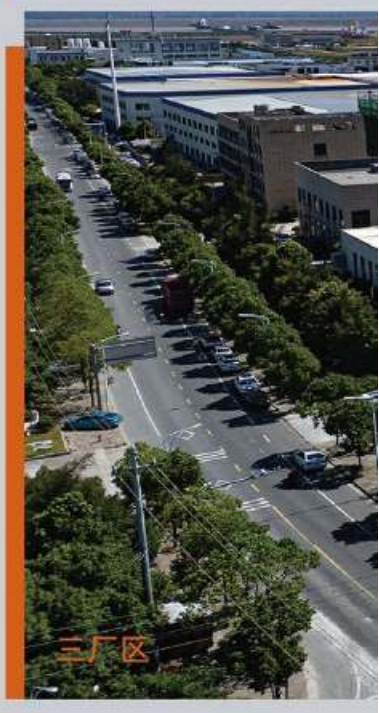

三鸥夹持科技　与世界工业同步

SanOu clamping technology Synchronized with world industry

www.sanouchuck.com




SAN DU


SAN DU

PRODUCT CATALOGUE 产品目录



5μm级超高精耐用动力卡盘
5μm CLASS SUPER PRECISION HIGH DURABLE POWER CHUCK 001-002



薄型高速中空回转油缸
HIGH SPEED COMPACT
HOLLOW ROTARY HYDRAULIC CYLINDERS 003-004



5μm级大孔径超精高耐用液压动力卡盘
5μm LARGE THOUGH HOLE SUPER PRECISION HIGH DURABLE POWER CHUCK 005



大孔径薄型中空油压回转缸
LARGE THROUGH HOLE THIN HOLLOW ROTARY HYDRAULIC CYLINDERS 006



后拉固锁式动力卡盘
PULL LOCK POWER CHUCK 007



附逆止阀中实回转油压缸
ROTAING HYDRAULIC CYLINDER WITH SAFETY DEVICE 008



Pro 高精度卡盘
Pro HIGH-PRECISION CHUCK 009-010



丰收牌高精密卡盘
"HARVES"BRAND HIGH PRECISION LATHE CHUCK 011



三钢高精密卡盘
"Sangang"BRAND HIGH PRECISION LATHE CHUCK 012



手动卡盘
MANUAL CHUCK 013-056



卡盘扳手
LATHE CHUCK WRENCH 057



法兰盘
ADAPTER PLATES 058



中型扳手钻夹头 KS系列
KEY TYPE CHUCK MEDIUM DUTY KS SERIES 059



中型扳手钻夹头 TT系列
KEY TYPE CHUCK MEDIUM DUTY TT SERIES 060


重型扳手钻夹头 JJ系列
KEY TYPE CHUCK HEAVY DUTY JJ SERIES 061-062


重型扳手钻夹头 ZW系列
KEY TYPE CHUCK HEAVY DUTY ZW SERIES 063


重型扳手钻夹头 HARVEST
KEY TYPE CHUCK HEAVY DUTY HARVEST SERIES 064


重型扳手钻夹头 三钢
KEY TYPE CHUCK HEAVY DUTY SANGANG SERIES 065


重型扳手钻夹头 三锦
KEY TYPE CHUCK HEAVY DUTY SANJING SERIES 066


重型扳手钻夹头 JP系列
KEY TYPE CHUCK HEAVY DUTY JP SERIES 067-068


重型扳手钻夹头 RM系列
KEY TYPE CHUCK HEAVY DUTY RM SERIES 069


自紧式钻夹头 丰收
SELF-TIGHTENING DRILL CHUCK HARVEST SERIES 070


自紧式钻夹头 三钢
SELF-TIGHTENING DRILL CHUCK SANGANG SERIES 071


自紧式钻夹头 重型
ADAPTER PLATES 072-081


自紧式钻夹头 轻型带锁
SELF-TIGHTENING CHUCK WITH LOCKING SYSTEM LIGHT DUTY 082


自紧式带锁钻夹头 自紧式钻夹头 重型
SELF-TIGHTENING CHUCK WITH LOCK SYSTEM
SELF-TIGHTEN CHUCK SYSTEM HEAVY DUTY 083-086


CNC高精密自紧夹头
CNC SELF-TIGHTEN CHUCK 087-089


丝锥夹头 两爪木工夹头 卡盘扳手
TAPPING CHUCK 2-JAW TAPPING CHUCK LATHE CHUCK WRENCH 090-91


卡盘扳手及包装
LATHE CHUCK WRENCH&PACKING 092-095

5μm级超精高耐用动力卡盘

5 μm CLASS SUPER PRECISION HIGH DURABLE POWER CHUCK



开创性重大升级

Groundbreaking major upgrade

1. 关键部件特殊淬火，一次性装夹加工成型。
2. 盘体硬度HRC60,在恶劣环境下使用大幅提高使用寿命。
3. 50万次重复夹紧，不易磨损，仍保持μm精度，且各项性能均保持稳定输出。
4. 基爪座及锲形套硬度HRC60,零下150度深冷处理，提高尺寸稳定性，耐磨性。

1. Special quenching of key components, one-time clamping processing.
2. Body hardness HRC60, greatly improve the service life in harsh environments.
3. 500,000 times repeated clamping, not easy to wear, still maintain μm accuracy, performance to maintain stable output.
4. The base jaw seat and the wedge plunger hardness HRC60, minus 150 degrees cryotreatment, improve dimensional stability, wear resistance.



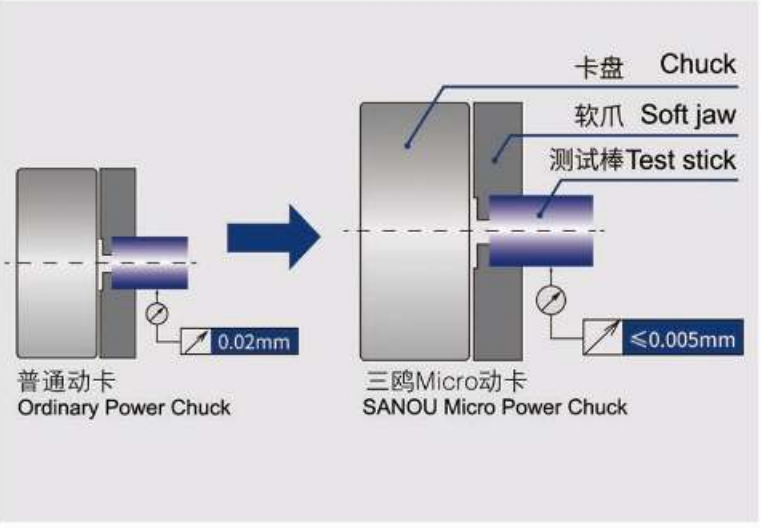

1.内六角螺丝Hexagon socket screw
2.法兰盘Flange
3.螺丝Screw
4.钢珠Steel ball
5.弹簧Spring
6.紧定螺丝Set screw
7.提拉环Lifting ring
8.推拉套Sliding sleeve
9.楔心套Wedge catch system
10.T型块T-Block
11.油杯Oil cup
12.爪座Jaw seat
13.软爪Soft jaw
14.螺丝Screw
15.六角扳手Hex key
16.吊环Ring
17.内六角螺丝Hexagon socket screw
18.防尘盖Dust cover
19.螺丝Screw
20.六角扳手Hex key
21.O型圈O-ring
22.防水赛Waterproof plug
23.六角扳手Hex key
24.套筒扳手Socket wrench



5μm级超精高耐用动力卡盘

5 μm CLASS SUPER PRECISION HIGH DURABLE POWER CHUCK

SANOU

尺寸图 DIMENSION DRAWING

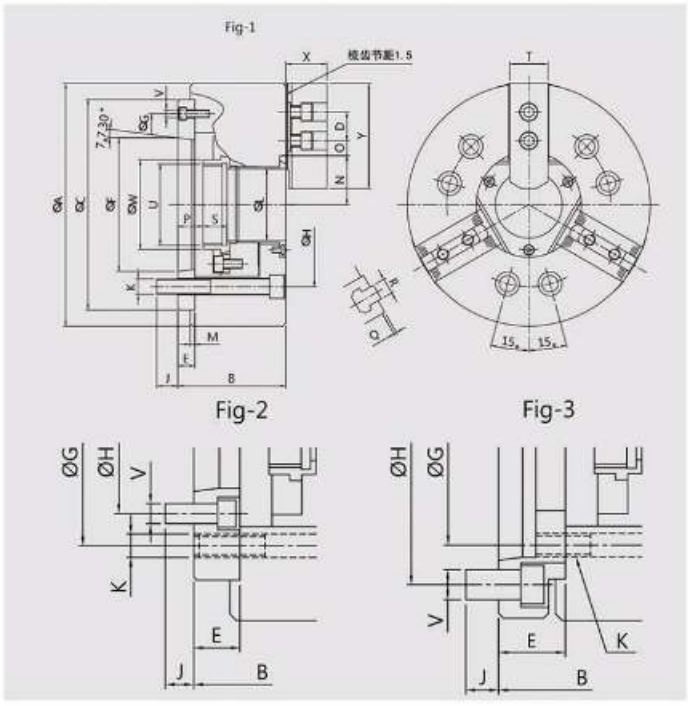

夹持力性能曲线 CLAMPING FORCE PERFORMANCE CURVE

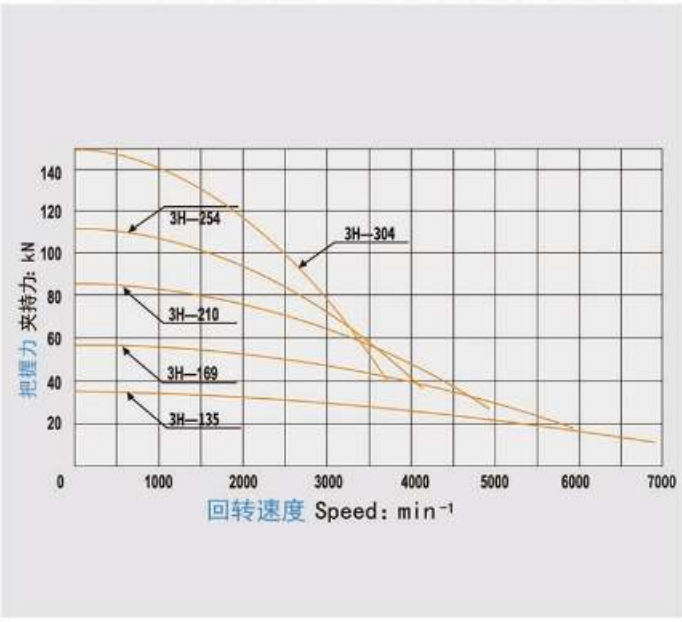

尺寸表 Dimension table

型号尺寸 Model Size	A	B	C	D	E	F	G	H	J	K	L	M	N max.	O max.	O min.	P max.	P min.	Q	R	S	T	U max.	V	W	X	Y	参考图 Reference picture
3H-135A4	135	71	110	14	15	63.513	96	82.6	15.5	3-M10	33	4	26.5	19.75	7.75	16	6	2	10	20	25	M40×1.5	3-M6	44.5	31	62	Fig-1
3H-135A5	135	88	110	14	32	82.563	82.6	104.8	14	3-M10	33	4	26.5	19.75	7.75	33	23	2	10	20	25	M40×1.5	6-M10	44.5	31	62	Fig-3
3H-169A4	169	96	140	20	20	63.513	104.8	82.6	16	6-M10	45	5	32	24	7	31	19	2	12	19	31	M55×2	6-M10	60	37.5	73	Fig-2
3H-169A5	169	91	140	20	15	82.563	116	104.8	16	6-M10	45	5	32	24	7	26	14	2	12	19	31	M55×2	3-M6	60	37.5	73	Fig-1
3H-169A6	169	111	140	20	35	106.375	104.8	133.4	16	6-M10	45	5	32	24	7	46	34	2	12	19	31	M55×2	6-M12	60	37.5	73	Fig-3
3H-210A5	210	109	170	25	23	82.563	133.4	104.8	14	6-M12	52	5	39	30	11	37.5	21.5	2	14	20.5	35	M55×2	6-M10	66	39	95	Fig-2
3H-210A6	210	103	170	25	17	106.375	150	133.4	18	6-M12	52	5	39	30	11	31.5	15.5	2	14	20.5	35	M60×2	3-M6	66	39	95	Fig-1
3H-210A8	210	126	170	25	40	139.719	133.4	171.4	24	6-M12	52	5	39	30	11	54.5	38.5	2	14	20.5	35	M60×2	6-M16	66	39	95	Fig-3
3H-254A6	254	120	220	30	25	106.375	171.4	133.4	18	6-M16	75	5	51	33.75	14.25	33.5	14.5	2	16	25	40	M60×2	6-M12	94	43	110	Fig-2
3H-254A8	254	113	220	30	18	139.719	190	171.4	24	6-M16	75	5	51	33.75	14.25	26.5	7.5	2	16	25	40	M85×2	3-M8	94	43	110	Fig-1
3H-254A11	254	145	220	30	50	196.869	171.4	235	28	6-M16	75	5	51	33.75	14.25	58.5	39.5	2	16	25	40	M85×2	6-M20	94	43	110	Fig-3
3H-304A6	304	129	220	30	25	106.375	171.4	133.4	18	6-M16	91	6	61.3	45.75	15.75	33	10	2	21	28	50	M100×2	6-M12	108	51	130	Fig-2
3H-304A8	304	122	220	30	18	139.719	190	171.4	25	6-M16	91	6	61.3	45.75	15.75	26	3	2	21	28	50	M100×2	3-M8	108	51	130	Fig-1
3H-304A11	304	154	220	30	50	196.869	171.4	235	28	6-M16	91	6	61.3	45.75	15.75	58	35	2	21	28	50	M100×2	6-M20	108	51	130	Fig-3

尺寸表 Specificaton sheet

型号尺寸 Model Size	通孔直径 Through hole diameter (mm)	拉杆行程 Tie rod stroke (mm)	爪行程直径 Jaw strike diameter (mm)	最大容许拉力 Maximum allowable pull force (KN)	最大夹持力 Maximum clamping force (KN)	最高转速 Maximum speed (r.p.m)	重量 Weight (kg)	转动惯量 Moment of inertia ($kg.m^2$)	外径夹持范围 Outer-diameter clamping force (mm)
3H-135A4	33	10	5.4	17	35	7000	7.8	0.020	6-135
3H-135A5	33	10	5.4	17	35	7000	9	0.023	6-135
3H-169A4	45	45	5.5	21	56	6000	15.5	0.065	15-169
3H-169A5	45	45	5.5	21	56	6000	14.7	0.062	15-169
3H-169A6	45	45	5.5	21	56	6000	17.3	0.073	15-169
3H-210A5	52	52	7.4	33	82	5000	25.8	0.19	20-210
3H-210A6	52	52	7.4	33	82	5000	25	0.184	20-210
3H-210A8	52	52	7.4	33	82	5000	29.3	0.217	20-210
3H-254A6	75	75	8.8	43	111	4200	41	0.37	25-254
3H-254A8	75	75	8.8	43	111	4200	38	0.34	25-254
3H-254A11	75	75	8.8	43	111	4200	48.4	0.436	25-254
3H-304A6	91	23	10.6	55	144	3300	62.5	0.809	30-304
3H-304A8	91	23	10.6	55	144	3300	59.5	0.77	30-304
3H-304A11	91	23	10.6	55	144	3300	69.9	0.912	30-304

薄型高速中空回转油缸

HIGH SPEED COMPACT HOLLOW ROTARY HYDRAULIC CYLINDERS



A款



B款

- 专利产品、高寿命、低噪音、高转速
  Patent product, high lifespan, low noise, high speed
- 无论是高压还是低压，都具有良好的密封性。
  Both high and low pressure have good sealing properties
- 低摩擦，启动阻力小，运动平稳，无“爬行”
  Low friction, low starting resistance, smooth movement,no “crawling”
- 双向压力密封
  Bidirectional pressure seal
- 保压时间长，泄油量小
  Long pressure holding time ,The oil discharge is small
- 安装时可前后锁
  It can be locked back and forth during installation



- 材质: 缸体铝合金锻造
  Material:Aluminum alloy forging of cylinder body.
- 新颖结构：缸体表面硬质氧化＞HV500,C型组合密封圈，油压0.2MPa时启动顺滑无“爬行”
  Novel structure: Hard oxidation on the surface of the cylinder body>HV500, C-type combination sealing ring, When the oil pressure is 0.2MPa, it starts smoothly without "crawling".
- 安全构造：内附逆止阀结构确保异常断电20秒内下降标准值1.96KN，实际测下降值在0.4以内。
  Safety structure: Comes with a check valve structure inside, it ensures that within 20 seconds of abnormal power outage, the standard value of decrease is 1.96KN, and the actual measured decrease value is within 0.4.
- 油温：长时间运行温升在30℃以内
  Oil temperature: The temperature rise during long-term operation is within 30 ℃

性能参数 PERFORMANCE PARAMETERS

型号尺寸 Model size	活塞直径 Piston diameter (mm)	活塞面积(cm^2) Piston area 推力侧 Thrust side	拉力侧 Tension side	最大推(拉)力 KN(kgf) Maximum push (pull) force 推力侧 Thrust side	拉力侧 Tension side	活塞行程 Piston stroke (mm)	最高使用压力 Maximum operating pressure MPa(kgf/cm^2)	最高转速 Maximum speed (r.p.m)	惯性矩 Moment of inertial I ($kg.m^2$)	流量 Flow rate L (min)
ST-536	105	70	68	24.5(2500)	23.5(2400)	15	3.9(40)	8000	0.012	3.0
ST-646	125	100	89	36.2(3700)	31.3(3200)	15	3.9(40)	7000	0.019	3.0
ST-852	155	160	150	57.8(5900)	53.9(5500)	22	3.9(40)	6200	0.053	3.9
ST-1075	180	198	183	70.5(7200)	65.6(6700)	25	3.9(40)	4700	0.096	4.2

尺寸图 DIMENSION DRAWING

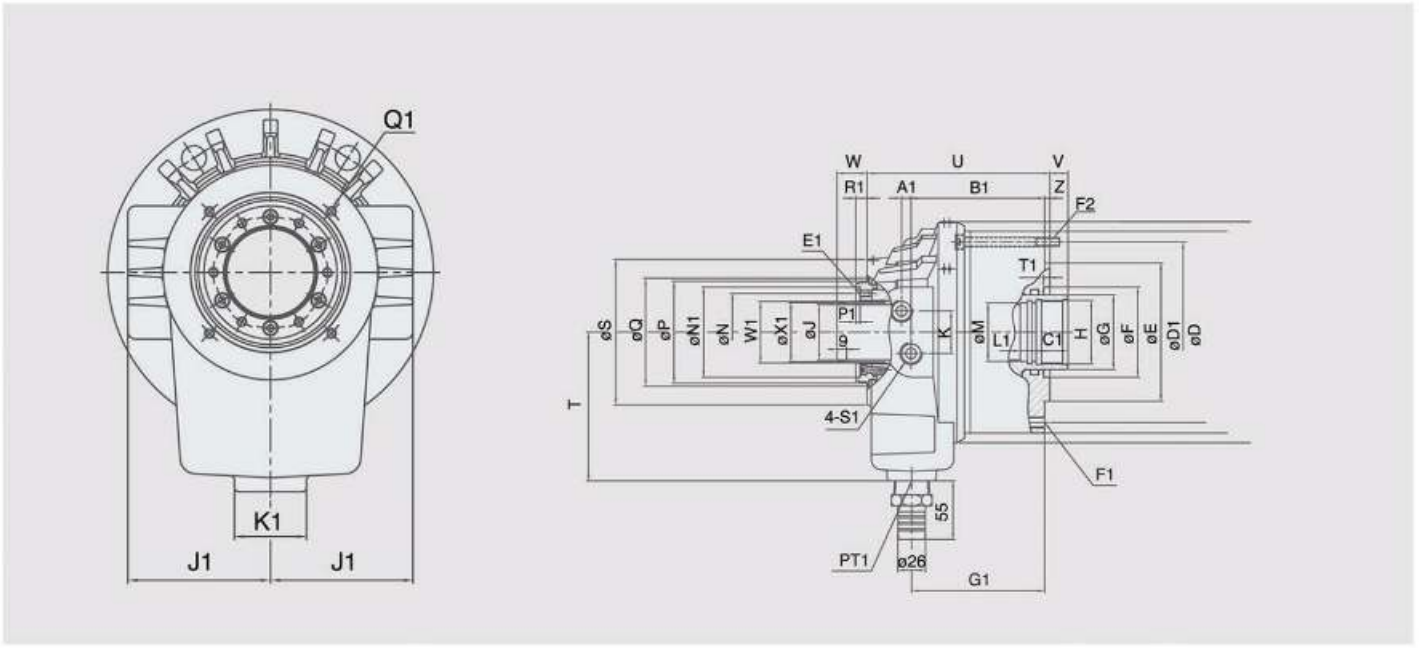

尺寸表 DIMENSION TABLE

型号尺寸 MODEL/SPEC.	A1	B1	C	C1	D	D1	E (h7)	E1	F	F1	F2	G	G1	H	J	J1
ST-536	9	107.1	140	25	115	125	100	6-M5×0.8P	65	6-M10×1.5P	6-M8×1.25P	48	110.5	M42×1.5P	36	67.5
ST-646	9	117.7	165	30	130	147	100	4-M6×1P	80	6-M10×1.5P	6-M8×1.25P	65	117	M55×2P	46	80
ST-852	9	125.7	190	30	170	170	130	4-M6×1P	85	12-M10×1.5P	12-M8×1.25P	70	125	M60×2P	52	91
ST-1075	11.6	143	215	35	190	196	160	4-M6×1P	125	12-M10×1.5P	12-M10×1.5P	95	143	M85×2P	75	107

型号尺寸 MODEL/SPEC.	K	K1	L1	M	N	N1	P	P1	Q	Q1	R1	S	S1	T	T1	U
ST-536	38	46	15	38	55	64	73	4	79	4-M5×0.8P(PCDØ88)	10	103	PT3/8	115	6	158.1
ST-646	40	46	15	50	64	76	85	4	90	4-M5×0.8P(PCDØ98)	10.5	121	PT1/2	125	6	164.2
ST-852	40	46	15	55	73	85	96	4	102	4-M6×1P(PCDØ110)	10.5	137	PT1/2	140	6	172.2
ST-1075	40	46	15	80	98	108	120	4	126	4-M6×1P(PCDØ155)	10.5	165	PT1/2	170	4	197.3

型号尺寸 MODEL/SPEC.	U1	V max.	V min	W max.	W1	W min	X1	活塞行程 Piston Stroke (mm)	Z	最高回转速 Max.Speed r.p.m.(min⁻¹)	活塞直径 Piston Dia (mm)	惯性矩 Moment of Inertia (kg.m²)
ST-536	160	10.05	-4.95	43.8	M44×1.5P	28.8	41.8	15	5	8000	105	0.012
ST-646	180	10.05	-4.95	44.25	M52×1.5P	29.25	49.8	15	5	7000	125	0.019
ST-852	205	17.05	-4.95	50.15	M58×1.5P	28.15	55.8	22	5	6200	155	0.053
ST-1075	231	20.05	-4.95	53.15	M84×2P	28.15	80.8	25	5	4700	180	0.096

型号尺寸 MODEL/SPEC.	流量 Oil Leakage Rate L (min)	最高使用压力 Max. Pressure MPa	kgf/cm²	活塞面积(cm²) Piston Area 推力侧 Push Side	拉力侧 Pull Side	最大推(拉)力 Maximum push (pull) force KN(kgf) 推力侧 Thrust side	拉力侧 Tension side	净重 Weight (kg)
ST-536	3.0	3.9	40	70	68	24.5(2500)	23.5(2400)	8.4
ST-646	3.0	3.9	40	100	89	36.2(3700)	31.3(3200)	3.0
ST-852	3.9	3.9	40	160	150	57.8(5900)	53.9(5500)	3.9
ST-1075	4.2	3.9	40	198	183	70.5(7200)	65.6(6700)	4.2

5μm级大孔径超精高耐用液压动力卡盘

5μm LARGE THOUGH HOLE SUPER PRECISION HIGH DURABLE POWER CHUCK

SANOU





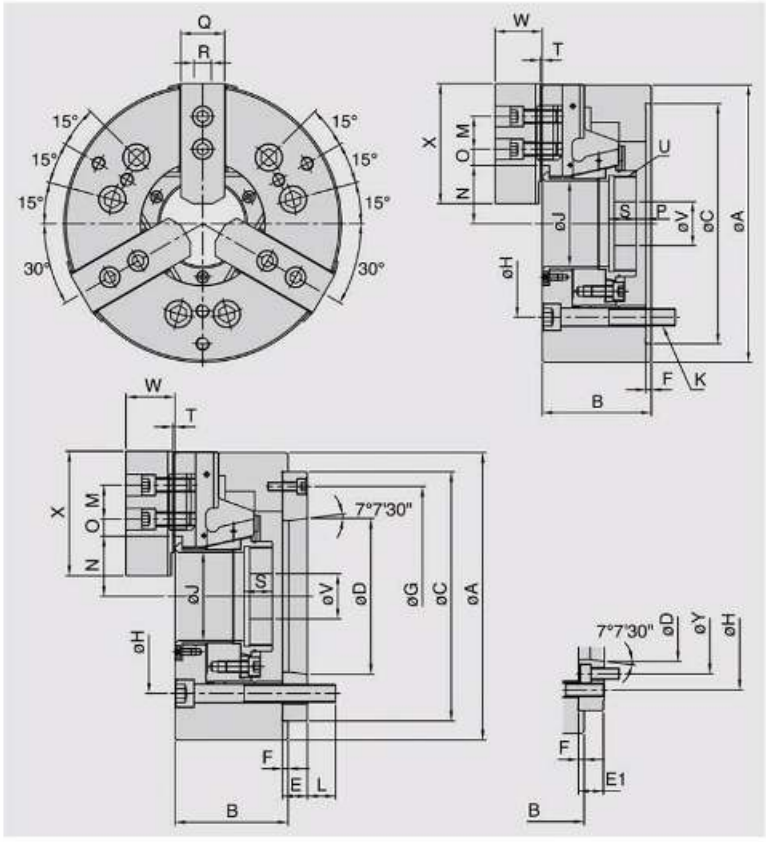

尺寸表 Specificaton sheet

型号尺寸 Model Size	主轴鼻端番号 Nose of spindle	A	B	C(h6)	D	E	E1	F	G	H	J	K
3HB-170	A_2-5	170	81	140	ø82.563	_	20	5	_	PCD ø122	52	6-M10×1.5P
3HB-215	A_2-6	215	91	170	ø106.375	_	22	5	_	PCD ø150	66	6-M12×1.75P
3HB-256	A_2-8	256	100	220	ø139.719	_	28	5	_	PCD ø180	81	6-M16×2P
3HB-315	A_2-11(A_2-8)	315	108	300	ø196.869	22	33	5	260	PCD ø235	106	6-M20×2.5P
3HB-405	A_2-15(A_2-11)	405	133	380	ø285.775	27	41	6	330.2	PCD ø330.2	142	6-M24×3P
3HB-455	A_2-15(A_2-11)	455	134	380	ø285.775	27	41	6	330.2	PCD ø330.2	166.5	6-M24×3P

型号尺寸 Model Size	L	M	N max.	N min.	O max.	O min.	P max.	P min.	Q	R	S	T	U
3HB-170	_	20	36.35	33.6	21.1	9.1	7	-5	31	12	23	2	M60×2P
3HB-215	_	25	46.6	42.9	26.6	11.6	10	-6	35	14	25	2	M75×2P
3HB-256	_	30	54.6	50.1	33.1	13.6	8.5	-10.5	40	16	25	2	M90×2P
3HB-315	27	30	69.7	64.3	45.6	12.6	8	-15	50	21	28	2	M115×2P
3HB-405	32	43	95.1	89.5	43.55	16.55	8	-15	62	22	42.5	5	M155×2P
3HB-455	32	43	108.29	102.45	55.55	16.55	11.5	-13	62	22	38	5	M180×3P

型号尺寸 Model Size	V	W	X	Y	通孔直径 Thru-hole [Diameter](mm)	柱塞行程 Plunger stroke (mm)	爪行程直径 Jaw strike diameter (mm)	最高回转数 Max. speed min⁻¹(r.p.m)
3HB-170	20	37.5	73	104.8	52	12	5.5	6000
3HB-215	30	39.5	80	133.4	66	16	7.4	5000
3HB-256	40	43	110	171.4	81	19	8.8	4200
3HB-315	50	51	129	171.4	106	23	10.6	3400
3HB-405	80	66	165	235	142	23	10.6	2500
3HB-455	80	66	165	235	166.5	24.5	11.3	2000

型号尺寸 Model Size	最大拉力 Max.pull force Kgf	(KN)	最大静夹持力 Max.Gripping force Kgf	(KN)	最大设定油压压力 Max.Hydr. pressure Kgf/cm²	(Mpa)	净重 Weight (Kg)	搭配油压缸型号 Matching Cylinder	夹持范围 Gripping Range
3HB-170	2200	(21.5)	5900	(58)	21	(2.0)	12.3	P1452S	ø13~ø170
3HB-215	3400	(33)	8800	(86)	26	(2.5)	21.7	P1666S	ø50~ø215
3HB-256	4300	(42)	11100	(109)	29	(2.8)	33.6	P1881S	ø34~ø254
3HB-315	5600	(55)	14580	(143)	29	(2.8)	57.7	P2110S	ø50~ø315
3HB-405	7240	(71)	18250	(179)	26	(2.5)	122.5	P2816	ø60~ø405
3HB-455	7240	(71)	18250	(179)	26	(2.5)	165	P2816	ø80~ø455

大孔径薄型中空油压回转缸

LARGE THROUGH HOLE THIN HOLLOW ROTARY HYDRAULIC CYLINDERS



A款

- 专利产品、高寿命、低噪音、高转速
- 无论是高压还是低压，都具有良好的密封性。
- 低摩擦，启动阻力小，运动平稳，无“爬行”
- 双向压力密封
- 保压时间长，泄油量小
- 安装时可前后锁
- Patent product, high lifespan, low noise, high speed
- Both high and low pressure have good sealing properties
- Low friction, low starting resistance, smooth movement,no “crawling”
- Bidirectional pressure seal
- Long pressure holding time ,The oil discharge is small
- It can be locked back and forth during installation



B款

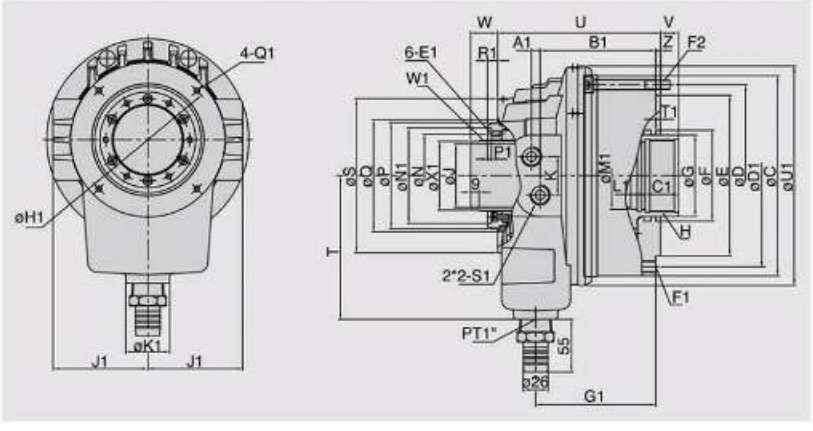

尺寸表 Specificaton sheet

型号尺寸 Model Size	A1	B1	C	C1	D	D1	E (h7)	E1	F	F1	F2	G	G1	H
ST652B	9	109.2	180	30	165	165	140	M6×1P	85	6–M10×1.5P	6–M8×1.25P	70	113.9	M60×2P
ST866B	9	120.7	209	35	190	190	168	M6×1P	95	12–M12×1.75P	6–M10×1.5P	85	125.4	M75×2P
ST1081B	10.7	133.7	222	35	205	205	168	M6×1P	110	12–M12×1.75P	6–M10×1.5P	100	139.2	M90×2P
ST1210B	12	152.2	266	35	240	240	200	M6×1P	135	12–M12×1.75P	6–M12×1.75P	125	158.5	M115×2P

型号尺寸 Model Size	H1	J	J1	K	K1	L1	M1	N	N1	P	P1	Q	Q1	R1	S	S1	T	T1
ST652B	120	52	83	40	46	15	55	73	85	96	4	102	M6×1P	10.5	137	PT 1/2	130	4
ST866B	145	66	99	40	46	15	70	88	100	111	4	117	M6×1P	10.5	161	PT 1/2	150	5
ST1081B	166	81	107.5	40	46	15	85	103	113	126	4	132	M6×1P	10.5	176	PT 1/2	175	5
ST1210B	201	106	125	40	46	15	110	133	145	160	4	166	M6×1P	10.5	210	PT 1/2	200	5

型号尺寸 Model Size	U	U1	V max.	V min.	W max.	W1	W min	X1	Z	活塞行程 Piston Stroke (mm)	最高回转速 Piston Stroke min⁻¹(r.p.m)	活塞直径 Piston Dia (mm)
ST652B	155.7	201	17	−3	48.2	M58×1.5P	28.2	55.8	5	20	6500	145
ST866B	170.2	229	19	−3	50.2	M74×1.5P	28.2	71.8	5	22	5600	165
ST1081B	189.2	240	21.1	−3.9	53.2	M89×2P	28.2	85.8	5	25	4800	180
ST1210B	216.7	284	19	−11	58.2	M118×2P	28.2	114.8	8	30	3500	210

型号尺寸 Model Size	惯性矩I Moment of Inertia Kgf/cm²	流量 Oil Leakage Rate (l/min)	最高使用压力 Max.Pressure Kgf/cm²	(Mpa)	活塞面积 Eff.piston area 押侧(Extend) cm²	拉侧(Retract) cm²	最大推工（拉）力 Max.Operating Force 推力侧Push Side Kgf	(KN)	拉力侧Push Side Kgf	(KN)	净重 Weight (Kg)
ST652B	0.035	3.9	40	(3.9)	137	126	4860	(47.6)	4464	(43.7)	12.3
ST866B	0.07	4	40	(3.9)	170	157	6048	(59.3)	5580	(54.7)	17.4
ST1081B	0.09	4.3	40	(3.9)	191	175	6804	(66.7)	6264	(61.4)	21.9
ST1210B	0.20	6.0	35	(3.4)	232	223.5	6900	(67.6)	6650	(65.2)	35.8

后拉固锁式动力卡盘
PULL LOCK POWER CHUCK





- 1. 销柱后拉型三爪中空卡盘。
- 2. 高夹持力及高精度。
- 3. 特别适合使用于需要重切削的场合。

- 1. Pin–Arbor Draw Down type 3–jaw thru–hole power chuck.
- 2. High radial gripping force and high accuracy.
- 3. Suitable for heavy maching.

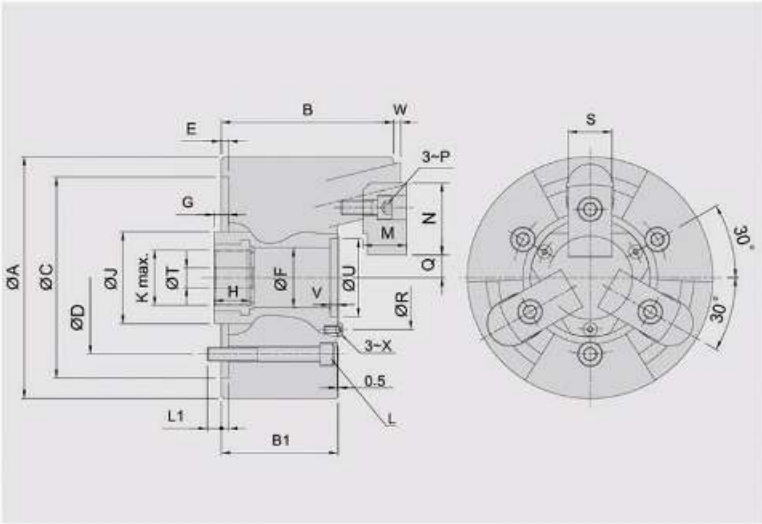

尺寸表 Specificaton sheet

型号尺寸 Model Size	模心行程 Plunger stroke (mm)	爪行程直径 Jaw strike diameter (mm)	夹持直径 Chucking Dia. 最大 max.(mm)	夹持直径 Chucking Dia. 最小 min.(mm)	容许最大入力 Max.d.b.pull KN(kgf)	最大夹持力 Maxi.Clamping force KN(kgf)	最高回转数 Max. speed min⁻¹(r.p.m)	I Moment of inertia kg.m²	重量 Weight (kg)	适用回转缸 Matching cyl.	最大使用压力 Max.pressure Mpa (kgf/cm²)
PD–203	4	2	42	14	5.8(590)	16.7 (1700)	10000	0.001	1.8	RK–75(N)	1.6(16)
PD–204	6	3	60	10	10.0(1020)	28.4 (2900)	8000	0.005	3.9	RK–75(N)	2.7(27)
PD–205	6	3	84	15	13.9(1420)	39.7 (4050)	8000	0.012	6.8	RK–100(N)	2.0(20)
PD–206	10	5	105	24	17.9(1830)	57.8 (5900)	7000	0.055	14.7	RK–100(N)	2.6(26)
PD–208	12	6	132	25	25.0(2550)	80.0 (8150)	6000	0.14	25.5	RK–125(N)	2.2(22)
PD–210	10	5	163	34	31.0(3160)	100.0 (10100)	4500	0.36	43.5	RK–125(N)	3.1(31)
PD–212	10	5	210	81	35.0(3570)	100.0 (10100)	3600	0.68	63.0	RK–125(N)	3.1(31)

外型尺寸 DIMENSIONS

型号尺寸 Model Size	A	B	B1	C(H6)	D	E	F	G max.	G min.	H	J	K	L	L1
PD–203	85	54.4	42	70	54	3.5	25	18	14	22	38	M20 × 1.5	3–M8	11
PD–204	110	72.5	55	85	70.6	4	30	16	10	24.5	42	M24 × 1.5	3–M10	12
PD–205	135	84.5	63	110	82.6	4	35	16	10	26	50	M28 × 1.5	3–M10	15
PD–206	168	118	80	140	104.8	5	45	20	10	31	60	M38 × 1.5	3–M10	16.5
PD–208	210	137	92	170	133.4	5	52	23	11	31	80	M48 × 2	3–M12	18
PD–210	254	152	102	220	171.4	5	75	25	15	37	105	M68 × 2	3–M16	23
PD–212	304	157	102	220	171.4	5	100	25	15	37	135	M92 × 2	3–M16	26

型号尺寸 Model Size	M	N	P	Q max.	Q min.	R	S	T	U(H6)	V	W max.	W min.	X
PD–203	12	26	M5	7.5	6.5	38	15	10	32	3.5	2	–2	M3
PD–204	17	40	M6	10.75	9.25	46	20	10	38	4	3	–3	M4
PD–205	20	41.5	M8	13.25	11.75	55	24	10	45	5	3	–3	M5
PD–206	30	50	M10	15.75	13.25	72	30	17	58	6	5	–5	M5
PD–208	34	63	M12	16.25	13.25	82	35	17	68	6	5	–7	M6
PD–210	39	74	M14	20.75	18.25	107	40	17	93	6	5	–5	M8
PD–212	44	74	M14	44.25	41.74	130	40	17	114	6	5	–5	M10

附逆止阀中实回转油压缸

ROTAING HYDRAULIC CYLINDER WITH SAFETY DEVICE



1. 短型、高速、轻量型回转油压缸。
2. 内建逆止阀自锁机构及压力泄压阀。
3. 安装时可同后端锁固之。

1. For short form,light weight and high speed rotary cylinder.
2. Built-in safety check valves and pressure relief valves.
3. Can screw it from the rear end of the cylinder when mounting.

泄油孔配管务必单独接回油压槽，以免产生背压。

The drain port should be independently connected to oil tank to avoid back pressure.

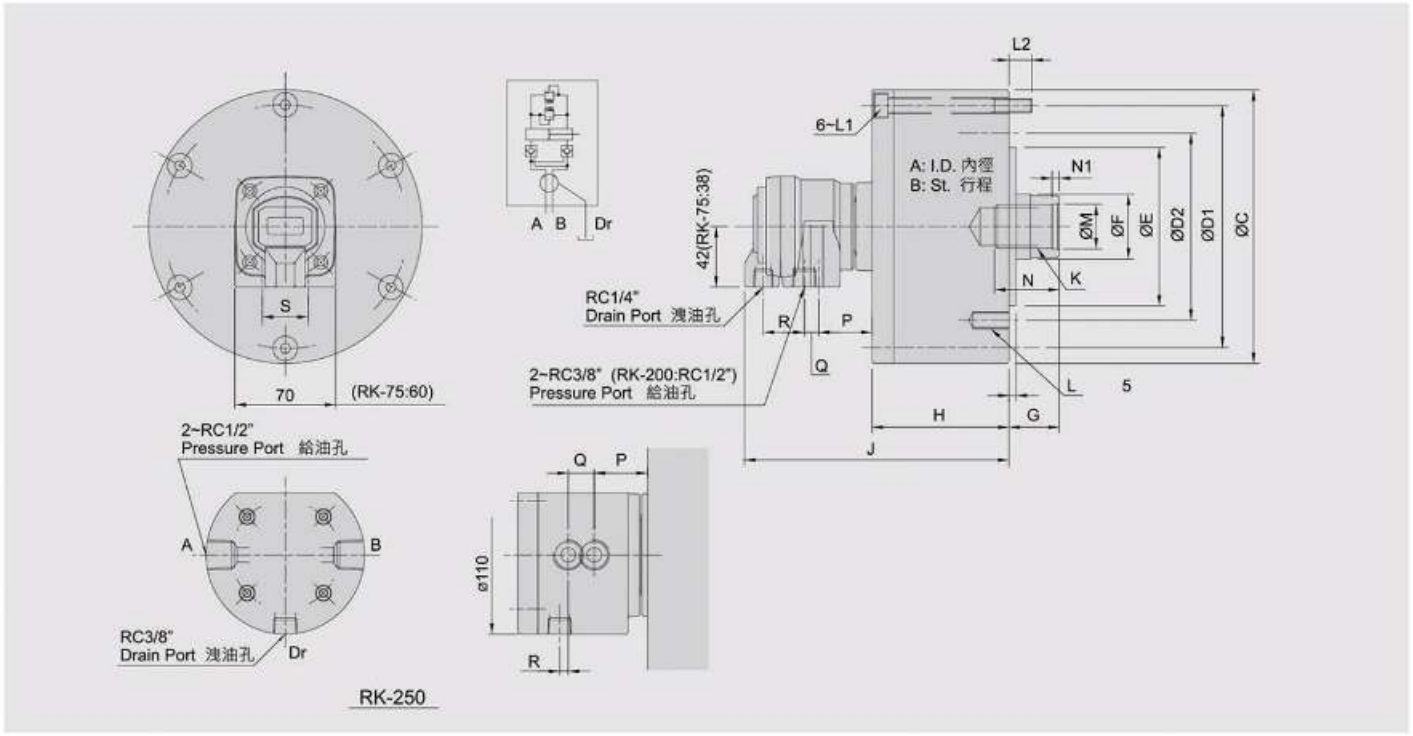

尺寸表 Specificaton sheet

型号尺寸 Model Size	活塞面积 Eff.piston area 押侧(Extend) cm^2	拉侧(Retract) cm^2	行程 Piston stroke (mm)	最高回转数 Max. speed min⁻¹(r.p.m)	最高使用压力 Max.pressure, Mpa (kgf/cm^2)	I Moment of inertia $kg.m^2$	重量 Weight (kg)
RK-75	44.2	37.1	15	6000	4.0(40)	0.01	2.9
RK-100	78.5	71.5	20	6000	4.0(40)	0.03	4.4
RK-125	122.7	113.1	25	6000	4.0(40)	0.05	6.9
RK-150	176.7	160.8	30	5500	4.0(40)	0.09	9.5
RK-200	314.1	290.4	35	5500	4.0(40)	0.28	15.4
RK-250	469.1	436.0	60	2000	5.0(50)	0.40	45.2

外型尺寸 DIMENSIONS

型号尺寸 Model Size	A	B	C	D1	D2	E (h7)	F	G max.	G min.	H	J	K	L	L1	L2	M (H8)	N	N1	P	Q	R	S
RK-75	75	15	107	90	90	65	30	45	30	57	148	M20×2.5	6-M8×16	M8×60	12	21	35	5	41.5	10	27.5	26
RK-100	100	20	132	115	100	80	30	45	25	72	163	M20×2.5	6-M10×20	M8×75	12	21	35	5	39.5	10	28.5	32
RK-125	125	15	160	140	130	110	35	50	25	82	172	M24×3.0	6-M12×20	M8×85	12	25	45	5	38.5	10	28.5	32
RK-150	150	30	190	170	130	110	45	55	25	95	184	M30×3.5	12-M12×24	M10×100	16	32	45	5	37	10	28.5	32
RK-200	200	35	245	220	145	120	55	70	35	115	201	M36×4.0	12-M16×30	M10×125	21	38	60	5	38	6	28.5	28
RK-250	245	60	307	275	220	160	65	85	25	165	255	M42×3.0	12-M20×35	M16×175	28	45	65	12	33	18	6	_





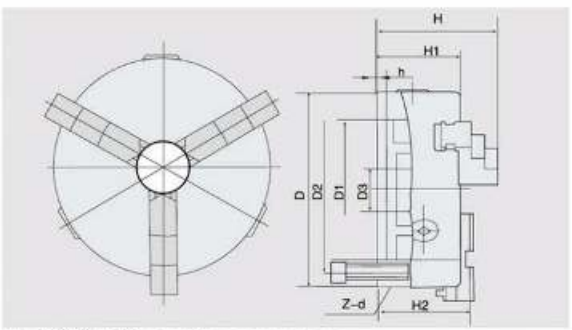

三鸥Pro高精款卡盘

SanOu Pro high precision chuck

同心度≤0.03mm

The concentricity is less than or equal to 0.03mm

- 盘体采用高强度铸铁。
  The chuck body is made of high strength cast iron
- 进口多用炉淬火，稳定性更高。
  Imported multi-purpose furnace quenching, higher stability.
- 全流程加工中心生产，零件一致性高，确保批量产品精度小于或等于0.03mm
  Full process machining-center production, high consistency of parts, to ensure that the accuracy of batch products is less than or equal to 0.03mm

值得信赖的高精度手动卡盘

Reliable high-precision manual chuck

- 高精度
  High precision
- 长寿命
  Long life
- 复合化加工工艺
  Composite processing technology

尺寸参数 Dimension parameters

规格 Size	D1	D2	D3	H	H1	H2	h	Z-d	最大输入扭矩Nm Max.input torque	极限转速 Max.speed	净 重kg Net.WT
80	55	66	16	66	50	-	3.5	3-M6	40	4800	1.9
100	72	84	22	74.5	55	-	3.5	3-M8	60	4200	3.2
125	95	108	30	84	58	-	4	3-M8	100	3800	5
130	100	115	30	86	60	-		3-M8	100	3800	5.6
160	130	142	45	95	65	-	3.5	3-M8	160	3600	8.8
165	130	145	40	96.5	66.5	-	5	3-M8	250	3600	9.5
190	155	172	54	105	75	-	4.5	3-M10	250	3000	13.8
200	165	180	65	109	75	-	5	3-M10	250	3000	15.5
240	195	215	70	120	80	-	5	3-M12	320	3000	24
250	206	226	80	120	80	-	8	3-M12	320	2400	25.7
315	260	285	100	141.5	90	-	5	3-M16	400	1800	47
320	270	290	100	148.5	95	-	6	3-M16	400	1800	47.5
325	272	296	100	149.5	97	-	11	3-M16	400	1800	49
380	325	350	145	156	102.5	-	12	3-M16	500	1200	65
							6				





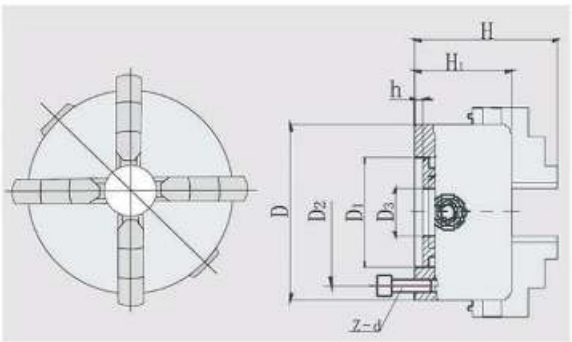

三鸥Pro高精款卡盘

SanOu Pro high precision chuck

同心度≤0.03mm

The concentricity is less than or equal to 0.03mm

- 盘体采用高强度铸铁。
  The chuck body is made of high strength cast iron
- 进口多用炉淬火，稳定性更高。
  Imported multi-purpose furnace quenching, higher stability.
- 全流程加工中心生产，零件一致性高，确保批量产品精度小于或等于0.03mm
  Full process machining-center production, high consistency of parts, to ensure that the accuracy of batch products is less than or equal to 0.03mm

值得信赖的高精度手动卡盘

Reliable high-precision manual chuck

- 高精度
  High precision
- 长寿命
  Long life
- 复合化加工工艺
  Composite processing technology

尺寸、性能参数 Dimension characterstic parameters

规格D Size	D1	D2	D3	H	H1	h	Z-d	最大输入扭矩Nm Max input torque	极限转r/min Max.speed	重量 Weight(kg)	报价 Unit Price
80G	55	66	16	66	50	3.5	3-M6	40	4000		
100	72	84	22	75	55	3.5	3-M8	60	3500		
125	95	108	30	84	58	4	3-M8	100	3000		
130	100	115	30	86	60.5	3.5	3-M8	100	3000		
160	130	142	45	95	65	5	3-M8	160	2500		
165	130	145	40	96.5	67.5	4.5	3-M8	160	2500		
190	155	172	54	115	75	5	3-M10	250	2000		
200	165	180	65	113	75	5	3-M10	250	2000		
240	195	215	70	124	80	8	3-M12	320	1600		
250	206	226	80	124	80	5	3-M12	320	1600		
315	260	285	100	141.5	90	6	3-M16	400	1200		
320	270	290	100	148.5	95	11	3-M16	400	1200		

"丰收牌" 锻钢卡盘
Harvest forged steel lathe chuck



- 1.锻钢盘体，高强度、高载荷、高转速。
- 2.卡爪、盘丝采用20铬锰钛（20CrMnTi）合金钢，抗冲击，更耐磨，使用寿命长。
- 3.全流程加工中心生产，德国 瑞士检测设备，保证批量产品精度≤0.03mm。
- 4.高精度、高夹紧力，柔性生产，快速发货。

- 1.Forged steel body,high strength high load,high rotation speed.
- 2.The jaws and scroll are made of 20CrMnTi alloy steel with high impact strength,high wear resistance and long service life.
- 3.Whole process CNC machinning,Swiss and Germany improted inspection tools ensure the precision≤0.03mm.
- 4.High precision,high clamping force,flexible production and fast delivery.

特征：

- 1.短圆柱连接形式。
- 2.K11A、K11C和K11D型卡盘卡爪为分离爪形式，可调整为正卡爪或反卡爪使用。
- 3.K11A和K11D型卡盘卡爪符合ISO3442标准。
- 4.K11C型卡盘卡爪为传统结构的分离爪。
- 5.可提供各种形式的软卡爪。

Features:

- 1.Short cylindrical center mounting.
- 2.The jaws for K11A,K11C and K11D chucks are composed of two-piece jaws.They can perfrom as either internal jaws through adjustment.
- 3.The jaws for K11A and K11D chucks conform to ISO3442 standard.
- 4.Model K11C chucks are supplied with traditional two-piece jaws.
- 5.We can provide all kinds of soft jaws.



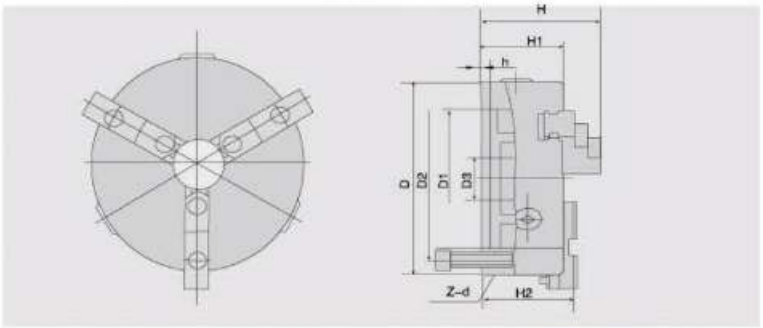



尺寸参数 Dimension parameters

规格 Size	D1	D2	D3	H	H1	H2	h	Z-d	最大输入扭矩Nm Max.input torque	极限转速 Max.speed	净 重kg Net.WT
80	55	66	16	66	50	-	3.5	3-M6	40	4800	1.9
100	72	84	22	74.5	55	-	3.5	3-M8	60	4200	3.2
125	95	108	30	84	58	-	4	3-M8	100	3800	5
130	100	115	30	86	60	-		3-M8	100	3800	5.6
160	130	142	45	95	65	-	3.5	3-M8	160	3600	8.8
165	130	145	40	96.5	66.5	-	5	3-M8	250	3600	9.5
190	155	172	54	105	75	-	4.5	3-M10	250	3000	13.8
200	165	180	65	109	75	-	5	3-M10	250	3000	15.5
240	195	215	70	120	80	-	5	3-M12	320	3000	24
250	206	226	80	120	80	-	8	3-M12	320	2400	25.7
315	260	285	100	141.5	90	-	5	3-M16	400	1800	47
320	270	290	100	148.5	95	-	6	3-M16	400	1800	47.5
325	272	296	100	149.5	97	-	11	3-M16	400	1800	49
380	325	350	145	156	102.5	-	12	3-M16	500	1200	65
							6				

三钢高精度卡盘

"Sangang"BRAND HIGH PRECISION LATHE CHUCK

三钢牌 Sangang

"三钢牌" 高牌号铸铁卡盘

"Sangang" brand high grade cast iron chuck





特征：

- 1.高精度≤0.05mm。
- 2.K11型卡盘配带整体爪（正卡爪和反卡爪各一付）。
- 3.易损部件经过特殊处理，有效的提高耐磨性和使用寿命。
- 4.较高的自定心精度，更大的夹紧力，满足于高紧密加工。
- 5.工字槽、伞齿孔淬火，提高硬度不易磨损，延长使用寿命。

Features:

- 1.Hight precision less than 0.05mm
- 2.K11 type chuck with overall jaws (a pair of upright jaws and reverse jaws)
- 3.Chuck body contains alloying element witch made by especially craft,with high density,high strength,to improve the durability of chuck
- 4.Higher precision of self-centering,larger clamping force,to satisfy the process of high precision
- 5.Jaw guide. hole of gear quenching,improue hardness not easy to wearr,extend service life.



工字槽淬火
Jaw guide quenching



伞齿孔淬火
The hole of gear quenching

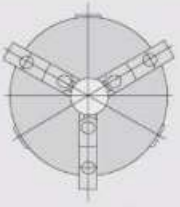





尺寸参数 Dimension parameters

规格 Size	D1	D2	D3	H	H1	H2	h	Z-d	最大输入扭矩Nm Max.input torque	极限转速 Max.speed	净 重kg Net.WT
80	55	66	16	66	50	—	3.5	3-M6	40	4800	1.9
100	72	84	22	75	55	—	3.5	3-M8	60	4200	3.2
125	95	108	30	84	58	—	4	3-M8	100	3800	5
130	100	115	30	86	60.5	—	3.5	3-M8	100	3800	5.6
160	130	142	45	95	65	—	5	3-M8	160	3600	8.8
160A	130	142	45	109.5	65	71.5	5	3-M8	160	3600	8.3
165	130	145	40	96.5	67.5	—	4.5	3-M8	160	3600	9.5
190	155	172	54	115	75	—	5	3-M10	250	3000	13.8
200	165	180	65	113	75	—	5	3-M10	250	3000	13.8
200C	165	180	65	122	75	78	5	3-M10	250	3000	15.5
200A	165	180	65	122	75	80	5	3-M10	250	3000	14.1
240	195	215	70	124	80	—	8	3-M12	320	2400	24
240C	195	215	70	130	80	84	8	3-M12	320	2400	20
250	206	226	80	124	80	—	5	3-M12	320	2400	25.7
250C	206	226	80	130	80	84	5	3-M12	320	2400	23
250A	206	226	80	136	80	86	5	3-M12	320	2400	23
315	260	285	100	141.5	90	—	6	3-M16	400	1800	47
315A	260	285	100	152.5	90	95	6	3-M16	400	1800	41
320	270	290	100	148.5	95	—	11	3-M16	400	1800	47.5
320C	270	290	100	154.5	95	102.5	11	3-M16	400	1800	42
325	272	296	100	149.5	97	—	12	3-M16	400	1800	49
325C	272	296	100	155.5	97	103.5	12	3-M16	400	1800	44
325A	272	296	100	160.5	97	102.5	12	3-M16	400	1800	46
380	325	350	145	156	102.5	—	6	3-M16	500	1200	65
380C	325	350	145	158	102.5	106	6	3-M16	500	1200	60
380A	325	350	145	175	102.5	111	6	3-M16	500	1200	62
400	340	368	145	155	101.5	—	6	3-M16	500	1200	74
400A	340	368	145	174	101.5	110	6	3-M16	500	1200	71
500	440	465	210	174	115.4	—	6	6-M16	630	850	124
500A	440	465	210	202	115.4	126	6	6-M16	630	850	119
630	560	595	280	204	135	—	7	6-M16	800	600	217
630A	560	595	280	220	135	144	7	6-M16	800	600	210
800A	710	760	385	249	150	167	8.5	6-M20	1000	500	256
1000A	905	950	460	310	198	216	9	6-M24	1200	400	745.6

K72——四爪单动卡盘

FOUR-JAW INDEPENDENT CHUCKS

三钢牌 Sangang®





适用范围：有色金属及塑料，非金属等切削加工。

特征：

- 1.高精度短圆柱连接。
- 2.易损部件都经过特殊淬火处理，有效地提高耐磨性和使用寿命。
- 3.单动调整中心，可用于各种形状加工，更大的夹紧力。

Application: Recommended for processing of non-ferrous metals, non-metals like plastics and so on.

Features:

- 1.High precision short cylindrical center mounting.
- 2.Flimsy parts are specifically engineered by quenching, for greater durability and extended life.
- 3.Adjusted independently to center, suitable for processing special with superior gripping force.

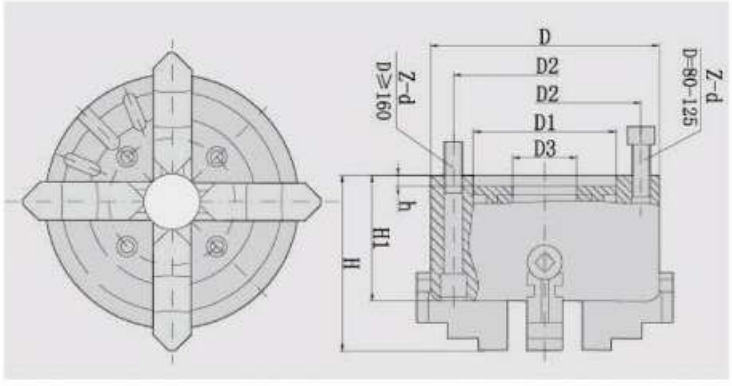



尺寸、性能参数 Dimension characterstic parameters

规格Size mm	D1	D2	D3	H1	h	z-d	净重kg Net WT	极限转速r/min Max.speed
80	55	66	22	42	4	3-M6	2.5	4800
100	72	84	25	54	4	4-M8	3	4800
125	95	108	30	56	6	4-M8	5	4200
160	65	95	55	65	5	4-M10	9	3800
200	80	112	70	71	6	4-M10	15	2100
250	110	130	100	80	6	4-M12	23	1800
300	152	130	95	100	6	4-M12	39	1400
320	140	165	115	100	6	4-M16	40	1400
350	130	168	115	100	6	4-M16	53	1400
400	160	185	125	101	8	4-M16	55	950
500	200	236	170	106	8	4-M20	102	600
630	220	258	180	118	10	4-M20	159	500
800	250	300	220	145	12	8-M20	/	500
1000	320	370	305	170	15	8-M20	/	400
1250	400	500	385	185	15	8-M20	/	300
1400	400	500	305	155	15	8-M20		
1600	420	520	320	175	20	8-M24		

K11——三爪自定心卡盘
THREE-JAW SELF-CENTRING CHUCKS

SAN OU CHUCK





特征：

- 1.短圆柱连接形式。
- 2.K11型卡盘配带整体爪(正卡爪和反卡爪各一副）。
- 3.K11A、K11C和K11D、K11E型卡盘卡爪为分离爪形式，可调整为正卡爪或反卡爪使用。
- 4.K11A和K11D、K11E型卡盘卡爪符合ISO3442标准。
- 5.K11C型卡盘卡爪为传统结构的分离爪。
- 6.可提供各种形式的软卡爪。

Features:

- 1.Short cylindrical center mounting.
- 2.Model K11 chucks are provide with one-piece jaws (which include a set of internal jaws and a set external ones).
- 3.The jaws for K11A, K11C and K11D, K11E chuck are composed of two-piece jaws. They can perform as either internal or external jaws throgh adjustment.
- 4.The jaws for K11A and K11D、K11E chucks conform to ISO3442 standard.
- 5.Model K11chucks are supplied with traditional two-piece jaws.
- 6.We can provide all kinds of soft jaws.

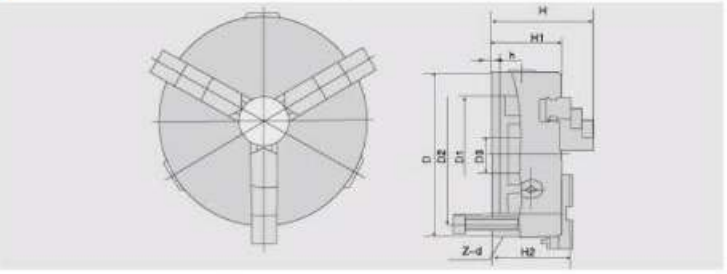



尺寸、性能参数 Dimension characterstic parameters

规格D Size	D1	D2	D3	H	H1	H2	h	Z-d	最大输入扭矩Nm Max input torque	极限转r/min Max speed	重量 Weight(kg)	报价 Unit Price
80	55	66	16	66	50	–	3.5	3-M6	40	4800	1.9	
100	72	84	22	74.5	55	–	3.5	3-M8	60	4200	3.2	
125	95	108	30	84	58	–	4	3-M8	100	3800	5	
130	100	115	30	86	60.5	–	3.5	3-M8	100	3800	5.6	
160	130	142	45	95	65	–	5	3-M8	160	3600	8.8	
160A	130	142	45	109	65	71	5	3-M8	160	3600	8.3	
165	130	145	40	96.5	67.5	–	4.5	3-M8	160	3600	9.5	
190	155	172	54	105	75	–	5	3-M10	250	3000	13.8	
200	165	180	65	109	75	–	5	3-M10	250	3000	15.5	
200C	165	180	65	122	75	78	5	3-M10	250	3000	14.1	
200A	165	180	65	122	75	80	5	3-M10	250	3000	14.1	
240	195	215	70	120	80	–	8	3-M12	320	2400	24	
240C	195	215	70	130	80	84	8	3-M12	320	2400	20	
250	206	226	80	120	80	–	5	3-M12	320	2400	25.7	
250C	206	226	80	130	80	84	5	3-M12	320	2400	23	
250A	206	226	80	136	80	86	5	3-M12	320	2400	23	
315	260	285	100	141.5	90	–	6	3-M16	400	1800	47	
315A	260	285	100	153	90	95	6	3-M16	400	1800	41	
320	270	290	100	143.5	95	–	11	3-M16	400	1800	47.5	
320C	270	290	100	153.5	95	101.5	11	3-M16	400	1800	42	
325	272	296	100	149.5	97	–	12	3-M16	400	1800	49	
325C	272	296	100	154.5	97	102.5	12	3-M16	400	1800	44	
325A	272	296	100	160.5	97	102.5	12	3-M16	400	1800	46	
380	325	350	145	155.7	102.5	–	6	3-M16	500	1200	65	
380C	325	350	145	156.5	102.5	104.5	6	3-M16	500	1200	60	
380A	325	350	145	171.5	102.5	107.5	6	3-M16	500	1200	62	
400	340	368	145	155	101.5	110	6	3-M16	500	1200	71	
500	440	465	210	175	115.4	126	6	6-M16	630	850	117.6	
500A	440	465	210	197	115.4	126	6	6-M16	630	850	119	
630A	560	595	280	218	135	142	7	6-M16	800	600	208	
800A	710	760	385	249	150	167	8.5	6-M20	1000	500	256	
1000A	905	950	460	310	198	216	9	6-M24	1200	400	745.6	
1250A	1060	1150	550	310	195	203.5	12	6-M30	1300	320	1516	

K11——短锥三爪自定心卡盘

SHORT-TAPER THREE-JAW SELF-CENTRING CHUCKS

SAN OU CHUCK



特征：

- 1.与机床主轴直接连接，刚性好，精度高。
- 2.短锥连接形式有A1、A2、C、D四种,短锥连接参数符合GB/T5900.1-GB/T5900.3(ISO702)标准.
- 3.卡爪结构形式分为整体爪、A型分离爪、C型分离爪、D型分离爪。
- 4.按盘体材质分为: 球墨铸铁（K11)、钢盘体（K11（G））两种，适应较高转速。

Features:

- 1.Mounted directly with the machine spindle nose and with nice rigidity and high accuracy.
- 2.The chuck mounting types are classified as form A1、A2and C. The connecting dirmensions conform to GB/T5900.1-GB5900.3 (ISO702) standards.
- 3.The structure types of jaws are classified as one piece jaws, two-piece jaws for form A、form C and form D.
- 4.The body materials are classified as iron(K11）、and steel(K11(G)), the body of nodularcost iron and steel is suitable for hiter rotation-speed.

K11系列卡盘产品规格与主轴端部配套选择一览表

Selection Table for NO. of Spindle Noses to K11chucks

规格D Size	系列 Series No.									报价 Unit Price
	I			II		III			IV	
	连接形式 Mtg.from									
	A1	A2	C，D	A1	C，D	A1	A2	C，D	A2	
	主轴头号 Short-taper No.									
125	-	-	3	-	4	-	-	-	4	
160	-	-	4	-	5	-	-	3	5	
200	5	-	5	6	6	-	4	4	5	
250	6	-	6	8	8	5	5	5	6、8	
315	8	-	8	-	11	6	6	6	8、11	
400	11	-	11	-	15	8	8	8	8	
500	15	-	15	-	-	11	11	11	11	
630	15	15	15	-	20	-	11	11	15	

K11——短锥三爪自定心卡盘
SHORT-TAPER THREE-JAW SELF-CENTRING CHUCKS

SAN OU CHUCK

A型 穿通螺钉连接 Form A Mounting from front





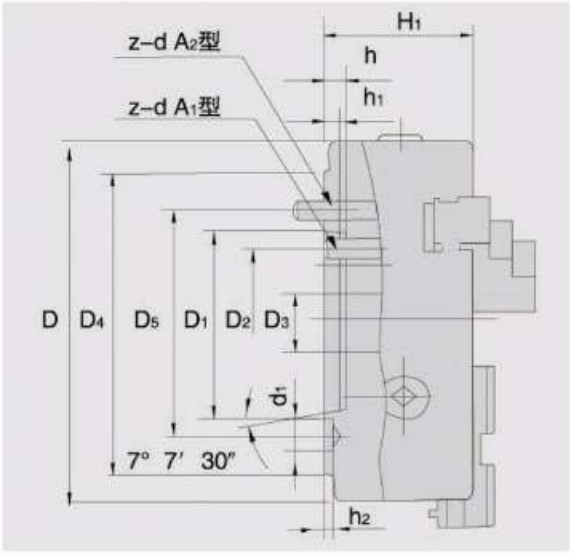

特征：

- 1.与机床主轴直接连接，刚性好，精度高。
- 2.短锥连接形式有A1、A2,短锥连接参数符合GB/T5900.1–GB/T5900.3(ISO702)标准.
- 3.卡爪结构形式分为整体爪、A型分离爪、C型分离爪、D型分离爪。
- 4.按盘体材质分为: 球墨铸铁（K11)、钢盘体（K11（G））两种，适应较高转速。

Features:

- 1.Mounted directly with the machine spindle nose and with nice rigidity and high accuracy.
- 2.The chuck mounting types are classified as form A1、A2. The connecting dirmensions conform to GB/T5900.1–GB5900.3 (ISO702) standards.
- 3.The structure types of jaws are classified as one piece jaws, two–piece jaws for form A、form C and form D.
- 4.The body materials are classified as iron(K11)、and steel(K11(G)), the body of nodularcost iron and steel is suitable for hiter rotation–speed.

A1型 （内圈螺钉连接） From A1 (Hse inner tapped holes)

规格 Size	D	D1	D2	D3	D4	D5	H1	h	h1	h2	d1	z–d	净重 Net WT	报价 Unit Price
200/A1 5 200C/A1 5 200A/A1 5	200	82.563	61.9	40	133	104.8	84	14.288	12	6.5	16.3	3–M10	17	
250/A1 6 250C/A1 6 200A/A1 6	250	106.375	82.6	55	165	133.4	98	15.875	13	6.5	19.5	6–M12	31	
325/A1 6 325C/A1 6 325A/A1 6	325	106.375	82.6	55	165	133.4	106	15.875	13	6.5	19.5	6–M12	30	
325/A1 8 325C/A1 8 325A/A1 8	325	139.719	111.1	78	210	171.4	106	17.462	14	8	24.2	6–M16	52	
380/A1 8 380C/A1 8 380A/A1 8	380	139.719	111.1	78	210	171.4	118	17.462	14	8	24.2	6–M16	53	
500/A1 11	500	196.869	165.1	125	280	235	135	19.050	16	10	29.4	6–M20	159	
500/A1 15	500	285.775	247.6	200	380	330.2	135	20.638	17	10	35.7	6–M24	159	

A2型 （外圈螺钉连接） From A2 (Use outer tapped holes)

规格 Size	D	D1	D3	D4	D5	H	h	h1	h2	d1	z–d	净重 Net WT	报价 Unit Price
200/A2 4 200C/A2 4 200A/A2 4	200	63.513	60	108	82.6	86	–	10	6.5	14.7	3–M10	17	
500/A2 11	500	196.869	190	280	235	135	20	16	10	29.4	6–M20	159	
630/A215	630	285.775	260	380	330.2	154	21	17	10	35.7	6–M24	312	
800/A220	800	412.775	385	520	463.6	182	23	19	10	42.1	6–M24	—	

K11——短锥三爪自定心卡盘

SHORT-TAPER THREE-JAW SELF-CENTRING CHUCKS

SAN OU CHUCK

A_2型（过渡盘连接）Form A_2（Use adapter plate)





特征：

与主轴连接方法为：

1.先将A_2型法兰盘安装于机床主轴上。

2.再将卡盘用前穿螺钉与A_2型法兰盘连接。

卡爪结构型式为整体爪，A型分离爪，C型分离爪。

Features:

Mounted with the machine spindle nose as follows:

1.At first,the adapter plate for form A2 can be miunted with the machine spindle nose.

2.Secondly,the chuck can be mounted with the adapter plate from front. The structure of the jaws includes one-piece ones and two-piece one for form A,C.

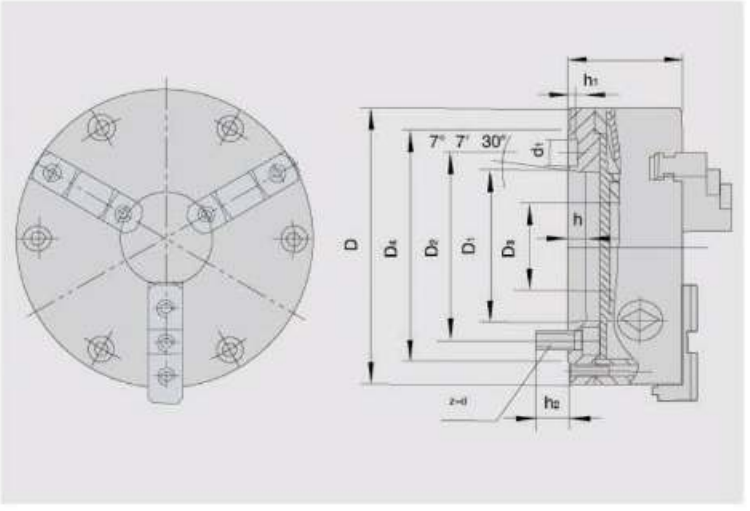

尺寸、性能参数 Dimension characterstic parameters

规格 Size	D	D1	D2	D3	d1	D4	H1	h	h1	h2	z-d	净重 Net WT	报价 Unit Price
165/A$_2$5	165	82.563	104.8	40	16.3	133	82	13	7.5	21	6-M10	11	
200/A$_2$5 200C/A$_2$5 200A/A$_2$5	200	82.563	104.8	65	19.5	165	95	16	8	23	6-M10	19	
250/A$_2$6 250C/A$_2$6 200A/A$_2$6	250	106.375	133.4	80	19.5	165	105	14	8	20	6-M12	34	
250/A$_2$8 250C/A$_2$8 250A/A$_2$8	250	139.719	171.4	80	24.2	210	105	16	10	25	6-M16	34	
315/A$_2$8 315A/A$_2$8	315	139.719	171.4	100	24.2	210	120	16	8	22	6-M16	61	
315/A$_2$11 315A/A$_2$11	315	196.869	235	100	29.4	280	120.5	16	10	31	6-M20	61	
400D/A$_2$8	400	139.719	171.4	130	24.2	210	129	16	8	23	6-M16	-	
400D/A$_2$11	400	196.869	235	130	29.4	280	130.5	16	10	27	6-M20	-	
500D/A$_2$11 500A/A$_2$11	500	196.869	235	210	29.4	280	145	16	10	27	6-M20	173	
500A/A215	500	285.775	330.2	210	35.7	380	159.5	17	10	36	6-M24	159	
630A/A211	630	196.869	235	191	29.4	280	174	16	10	27	6-M20	312	
630A/A215	630	285.775	330.2	270	35.7	380	170	17	10	35	6-M24	312	
630A/A220	630	412.775	463.6	318	42	520	174	19	10	11	6-M24	312	
800A/A211	800	196.869	235	192.5	29.4	280	153	16	10	28	6-M20	—	
800A/A215	800	285.775	330.2	281.5	35.7	380	149	17	10	30	6-M22	—	
800A/A220	800	412.775	463.6	385	42	520	182	19	10	43	6-M24	—	
1000A/A220	800	412.775	463.5	385	42	520	214	19	10	33	6-M24	—	

K11——短锥三爪自定心卡盘

SHORT-TAPER THREE-JAW SELF-CENTRING CHUCKS

SAN OU CHUCK

C型 拨盘、螺栓锁紧连接 Form C Mounting with studs and locknuts



特征：

- 1.与机床主轴直接连接，刚性好，精度高。
- 2.短锥连接形式有C型,短锥连接参数符合GB/T5900.1-GB/T5900.3(ISO702)标准.
- 3.卡爪结构形式分为整体爪、A型分离爪、C型分离爪、D型分离爪。
- 4.按盘体材质分为: 球墨铸铁（K11)、钢盘体（K11（G））两种，适应较高转速。

Features:

- 1.Mounted directly with the machine spindle nose and with nice rigidity and high accuracy.
- 2.The chuck mounting types are classified as form C. The connecting dirmensions conform to GB/T5900.1-GB5900.3 (ISO702) standards.
- 3.The structure types of jaws are classified as one piece jaws, two-piece jaws for form A、form C and form D.
- 4.The body materials are classified as iron(K11）、and steel(K11(G)), the body of nodularcost iron and steel is suitable for hiter rotation-speed.



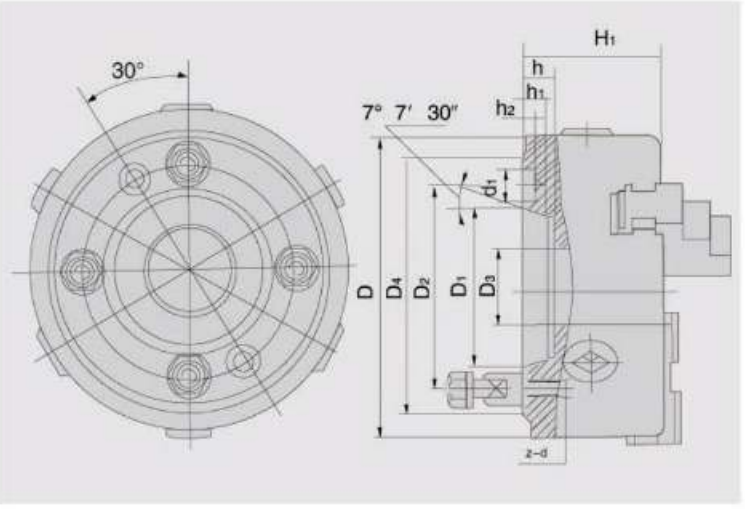

尺寸、性能参数 Dimension characterstic parameters

规格 Size	D	D1	D2	D3	D4	H1	h	h1	h2	d1	z-d	净重 Net WT	报价 Unit Price
125/C3	125	53.975	75	30	102	63	13	10	-	-	3-M10	30	
125/C4	125	63.513	85	30	112	63	13	10	6.5	14.7	3-M10	30	
160/C3 160A/C3	160	53.975	75	40	102	76	13	10	-	-	3-M10	10	
160/C4 160A/C4	160	63.513	85	40	112	70	13	10	6.5	14.7	3-M10	10	
160/C5 160A/C5	160	82.563	104.8	40	135	73	15	12	6.5	16.3	4-M10	10	
200/C4 200C/C4 200A/C4	200	63.513	85	50	112	84	13	10	6.5	14.7	3-M10	17	
200/C5 200C/C5 200A/C5	200	82.563	104.8	50	135	84	15	12	6.5	16.3	4-M10	17	
200/C6 200C/C6 200A/C6	200	106.375	133.4	65	170	84	16	13	6.5	19.5	4-M12	17	
250/C5 250C/C5 250A/C5	250	82.563	104.8	80	135	95	15	12	6.5	16.3	4-M10	30	
250/C6 250C/C6 250A/C6	250	106.375	133.4	80	170	95	16	13	6.5	19.5	4-M12	30	
250/C8 250C/C8 250A/C8	250	139.719	171.4	80	220	95	18	14	8	24.2	4-M16	30	
325/C6 325C/C6 325A/C6	325	106.375	133.4	100	170	103.5	16	13	6.5	19.5	4-M12	53	
325/C8 325C/C8 325A/C8	325	139.719	171.4	105	220	106	18	14	8	24.2	4-M16	53	
325/C11 325C/C11 325A/C11	325	196.869	235	105	290	106	20	16	10	29.4	6-M20	53	
380C/C8 380A/C8	380	139.719	171.4	130	220	118	18	14	8	24.2	4-M16	79	
380C/C11 380A/C11	380	196.869	235	135	290	118	20	16	10	29.4	6-M20	79	
380/C8 500D/C11	500	196.869	235	190	290	135	20	16	10	29.4	6-M20	159	
380/C11 500D/C15	500	285.775	330.2	210	400	135	20	17	10	35.7	6-M24	159	
630/C11 630A/C11	630	196.869	235	190	290	150	20	16	10	29.4	6-M20	312	
630/C15 630A/C15	630	285.775	330.2	210	400	150	21	17	10	35.7	6-M24	312	
800A/C15	800	285.775	330.2	281.5	400		21	17	10	35.7	6-M24	—	
800A/C20	800	412.775	463.6	385	540		23	19	10	42.1	6-M24	—	

D型 拉杆、凸轮锁紧连接
Form D Mounting with studs and camlocks



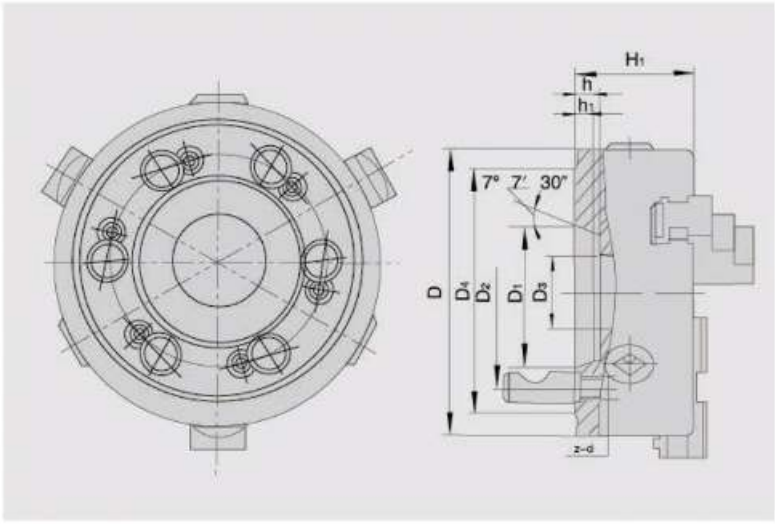





尺寸、性能参数 Dimension characterstic parameters

规格 Size	D	D1	D2	D3	D4	H1	h	h1	z-d	净重 Net WT	报价 Unit Price
125/D3	125	53.975	70.6	30	92	63	13	10	3-M10×1	–	
125/D4	125	63.513	82.6	30	117	63	13	10	3-M10×1	–	
160/D3 160A/D3	160	53.975	70.6	40	92	76	13	10	3-M10×1	10	
160/D4 160A/D4	160	63.513	82.6	40	117	71	13	10	3-M10×1	10	
160/D5 160A/D5	160	82.563	104.8	40	146	71	15	12	6-M12×1	10	
200/D4 200C/D4 200A/D4	200	63.513	82.6	50	117	86	13	10	3-M10×1	17	
200/D5 200C/D5 200A/D5	200	82.563	104.8	50	146	86	15	12	6-M12×1	17	
200/D6 200C/D6 200A/D6	200	106.375	133.4	65	181	86	16	13	6-M16×1.5	17	
250/D5 250C/D5 250A/D5	250	82.563	104.8	70	146	95	15	12	6-M12×1	31	
250/D6 250C/D6 250A/D6	250	106.375	133.4	80	181	98	16	13	6-M16×1.5	32	
250/D8 250C/D8 250A/D8	250	139.719	171.4	80	225	98	18	14	6-M20×1.5	32	
325/D6 325C/D6 325A/D6	325	106.375	133.4	102	181	103.5	16	13	6-M16×1.5	51	
325/D8 325C/D8 325A/D8	325	139.719	171.4	102	225	103.5	18	14	6-M20×1.5	51	
325/D11 325C/D11 325A/D11	325	196.869	235	105	298	103.5	20	16	6-M22×1.5	53	
380/D8 380C/D8 380A/D8	380	139.719	171.4	130	225	118	18	14	6-M20×1.5	81	
380/D11 380C/D11 380A/D11	380	196.869	235	135	298	118	20	16	6-M22×1.5	81	
500A/D11	500	196.869	235	190	298	135	20	16	6-M22×1.5	159	
500A/D15	500	285.775	330.2	210	403	135	21	17	6-M24×1.5	159	
630D8	630	139.719	171.4	136	225	150	18	14	6-M20×1.5	/	
630D11	630	196.869	235	190	298	150	20	16	6-M24×1.5	/	
630/D11 630A/D11	630	196.869	235	190	298	150	20	16	6-M22X1.5	312	
630/D15 630A/D15	630	285.775	330.2	210	403	150	21	17	6-M24X1.5	312	
800A/D15	800	285.775	330.2	281.5	403		21	17	6-M24X1.5	—	
800A/D20	800	412.775	463.6	385	546		23	19	6-M27X2	—	

K11——三爪自定心分离爪卡盘

THREE-JAW SELF-CENTRING SEPARATION CHUCKS

SAN OU CHUCK



特征：

- 1.短圆柱连接形式。
- 2.K11A、K11C和K11D型卡盘卡爪为分离爪形式，可调整为正卡爪或反卡爪使用。
- 3.K11A和K11D型卡盘卡爪符合ISO3442标准。
- 4.K11C型卡盘卡爪为传统结构的分离爪。
- 5.可提供各种形式的软卡爪。

Features：

- 1.Short cylindrical center mounting.
- 2.The jaws for K11A,K11C and K11D chucks are composed of two-piece jaws. They can perfrom as either internal jaws through adjustment.
- 3.The jaws for K11A and K11D chucks conform to ISO3442 standard. Model K11C chucks are supplied with traditional two-piece
- 4.jaws.
- 5.We can provide all kinds of soft jaws.



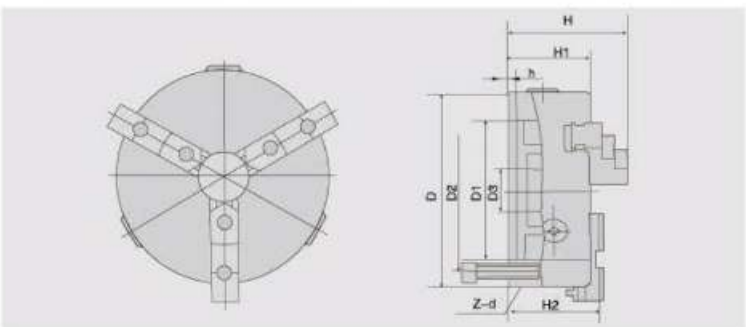



尺寸参数 Dimension parameters

规格 Size	D1	D2	D3	H	H1	H2	h	Z-d	最大输入扭矩Nm Max.input torque	极限转速 Max.speed	净 重kg Net.WT
160A	130	142	45	109	65	71	5	3-M8	160	3600	8.3
200C	165	180	65	122	75	78	5	3-M10	250	3000	14.1
200A	165	180	65	122	75	80	5	3-M10	250	3000	14.1
240C	195	215	70	130	80	84	8	3-M12	320	2400	20
250C	206	226	80	130	80	84	5	3-M12	320	2400	23
250A	260	226	80	136	80	86	5	3-M12	320	2400	23
315A	260	285	100	153	90	95	6	3-M16	400	1800	41
320C	270	290	100	153.5	95	101.5	11	3-M16	400	1800	42
325C	272	296	100	154.5	97	102.5	12	3-M16	400	1800	44
325A	272	296	100	160.5	97	102.5	12	3-M16	400	1800	46
380C	325	350	145	156.5	102.5	104.5	6	3-M16	500	1200	60
380A	325	350	145	171.5	102.5	107.5	6	3-M16	500	1200	62
400D	340	368	145	172	101.5	108	6	3-M16	500	1200	71
500D	440	465	210	202	115	126	6	6-M16	630	850	117.6
500A	440	465	210	202	115	126	6	6-M16	630	850	119
630D	560	595	280	218	135	142	7	6-M16	800	600	-
800A	710	760	385	249	150	167	8.5	6-M20	1000	500	256
1000A	905	950	460	310	198	216	9	6-M24	1200	400	745.6

K11——三爪自定心卡盘　　防尘卡盘

THREE-JAW SELF-CENTRING CHUCKS

SAN OU CHUCK



特征：

- 1.短圆柱连接。
- 2.卡爪形式有整体爪和A型、C型分离爪（符合ISO3442标准）
- 3.卡盘中孔装有防尘橡胶套，可有效地防止铁屑、粉末等微颗粒进入卡盘内部，造成卡盘卡滞和零件的加剧磨损，确保了产品的稳定性和使用寿命。
- 4.可提供各种形式的软卡爪。

Features:

- 1.Short cylindrical center mounting.
- 2.The model of the jaws are one-piece jaws and two-piece jaws for from A,C(conform to ISO3442 standard).
- 3.Rubber blocking is set in the middle hole of chuck,avoiding the scrapiron, powder and other Micro-particles to get into the inner chuck,leading to the block of chuck and unstable wear, therefore the stability and service life is assured.
- 4.We can provide all kinds of soft jaws.



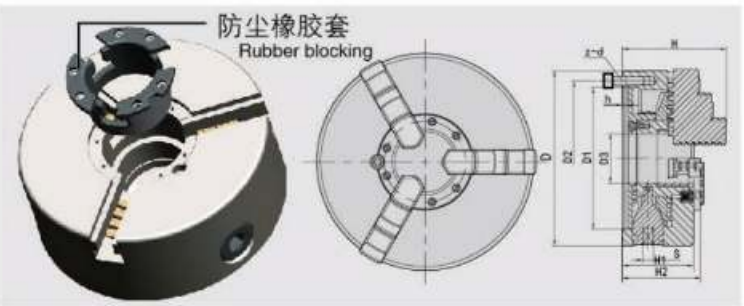

尺寸参数　Dimension parameters

规格 Size D	D1	D2	D3	H	H1	H2	h	S	Z-d
125（5"）	95	108	30	84	58	—	4	10	3-M8
130（5"）	100	115	30	86	60.5	—	3.5	10	3-M8
160（6"）	130	142	45	95	65	—	5	10	3-M8
160A（6"）	130	142	45	109.5	65	71.5	5	10	3-M8
165（6"）	130	145	40	96.5	67.5	—	4.5	12	3-M8
190（7"）	155	172	54	115	75	—	5	12	3-M10
200（8"）	165	180	65	113	75	—	5	12	3-M10
200C（8"）	165	180	65	122	75	78	5	12	3-M10
200A（8"）	165	180	65	122	75	80	5	12	3-M10
240（9"）	195	215	70	124	80	—	8	12	3-M12
240C（9"）	195	215	70	130	80	84	8	12	3-M12
250（10"）	206	226	80	124	80	—	5	12	3-M12
250C（10"）	206	226	80	130	80	84	5	12	3-M12
250A（10"）	206	226	80	136	80	86	5	12	3-M12
315（12"）	260	285	100	141.5	90	—	6	13	3-M16
315A（12"）	260	285	100	152.5	90	95	6	13	3-M16
320（13"）	270	290	100	148.5	95	—	11	13	3-M16
320C（13"）	270	290	100	154.5	95	102.5	11	13	3-M16
325（13"）	272	296	100	149.5	97	—	12	13	3-M16
325C（13"）	272	296	100	155.5	97	103.5	12	13	3-M16
325A（13"）	272	296	100	160.5	97	102.5	12	13	3-M16
380（15"）	325	350	145	156	102.5	—	6	14	3-M16
380C（15"）	325	350	145	158	102.5	106	6	14	3-M16
380A（15"）	325	350	145	175	102.5	111	6	14	3-M16
400（16"）	340	368	145	155	101.5	—	6	14	3-M16
400A（16"）	340	368	145	174	101.5	110	6	14	3-M16
500（20"）	440	465	210	174	115.4	—	6	17	6-M16
500A（20"）	440	465	210	202	115.4	126	7	17	6-M16
630（25"）	560	595	280	204	135	—	7	19	6-M16
630A（25"）	560	595	280	220	135	144	8.5	19	6-M16
800A（32"）	710	760	385	249	150	167	9	19	6-M20
1000A(39")	905	950	460	310	198	216		24	6-M24

K11——三爪自定心卡盘　　防尘卡盘

THREE-JAW SELF-CENTRING CHUCKS

SAN OU CHUCK

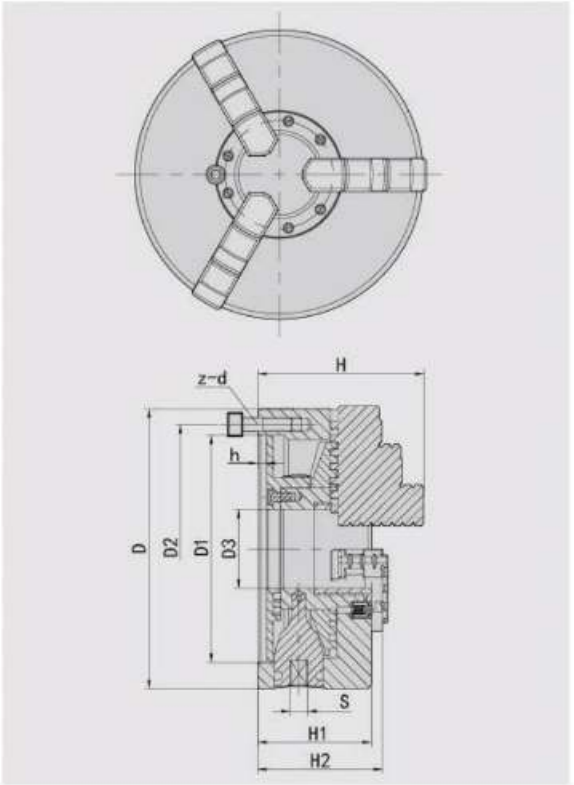

特征：

- 1.短圆柱连接。
- 2.卡爪形式有整体爪和A型、C型分离爪（符合ISO3442标准）
- 3.卡盘中孔装有防尘橡胶套，可有效地防止铁屑、粉末等微颗粒进入卡盘内部，造成卡盘卡滞和零件的加剧磨损，确保了产品的稳定性和使用寿命。
- 4.可提供各种形式的软卡爪。

Features:

- 1.Short cylindrical center mounting.
- 2.The model of the jaws are one-piece jaws and two-piece jaws for from A,C(conform to ISO3442 standard).
- 3.Rubber blocking is set in the middle hole of chuck,avoiding the scrapiron, powder and other Micro-particles to get into the inner chuck,leading to the block of chuck and unstable wear, therefore the stability and service life is assured.
- 4.We can provide all kinds of soft jaws.

规格 Specifications

规格 D SIZE	最大输入扭矩 N.m Max. input torque	极限转速 r/min Max. speed	最大静态夹紧力 KN Max. static gripping dia	夹持范围 Clamping Range			净重 Kg Net.WT
				正爪 Internal Jaws		反爪 External Jaws	
				夹紧范围 Clamping range	撑紧范围 Jamming range	夹紧范围 Clamping range	
125（5"）	100	3800	17	2.5-40	38-125	38-110	5
130（5"）	100	3800	17	3-40	40-130	40-120	5.6
160（6"）	160	3600	24	3-55	50-160	55-145	8.8
160A（6"）	160	3600	24	3-55	50-160	55-145	8.3
165（6"）	160	3600	24	4-60	52-165	55-150	9.5
190（7"）	250	3000	31	4-70	65-190	65-190	13.8
200（8"）	250	3000	31	4-85	65-200	65-200	13.8
200C（8"）	250	3000	31	4-85	65-200	65-200	15.5
200A（8"）	250	3000	31	4-85	65-200	65-200	14.1
240（9"）	320	2400	37	6-100	80-250	90-250	24
240C（9"）	320	2400	37	6-100	80-250	90-250	20
250（10"）	320	2400	37	6-110	80-250	90-250	25.7
250C（10"）	320	2400	37	6-110	80-250	90-250	23
250A（10"）	320	2400	37	6-110	80-250	90-250	23
315（12"）	400	1800	46	10-140	95-315	100-315	47
315A（12"）	400	1800	46	10-140	95-315	100-315	41
320（13"）	400	1800	46	11.5-145	95-320	110-320	47.5
320C（13"）	400	1800	46	11.5-145	95-320	110-320	42
325（13"）	400	1800	46	11.5-165	95-350	110-340	49
325C（13"）	400	1800	46	11.5-165	95-350	110-340	44
325A（13"）	400	1800	46	11.5-165	95-350	110-340	46
380（15"）	500	1200	55	11.5-210	95-400	110-400	65
380C（15"）	500	1200	55	11.5-210	95-400	110-400	60
380A（15"）	500	1200	55	11.5-210	95-400	110-400	62
400（16"）	500	1200	55	15-210	120-400	120-400	74
400A（16"）	500	1200	55	15-210	120-400	120-400	71
500（20"）	630	850	65	25-280	150-500	150-500	124
500A（20"）	630	850	65	25-280	150-500	150-500	119
630（25"）	800	600	72	50-350	170-630	170-630	217
630A（25"）	800	600	72	50-350	170-630	170-630	210
800A（32"）	1000	500	80	150-450	300-800	400-800	250
1000A(39")	1200	400	85	250-520	350-1000	400-1000	745.6

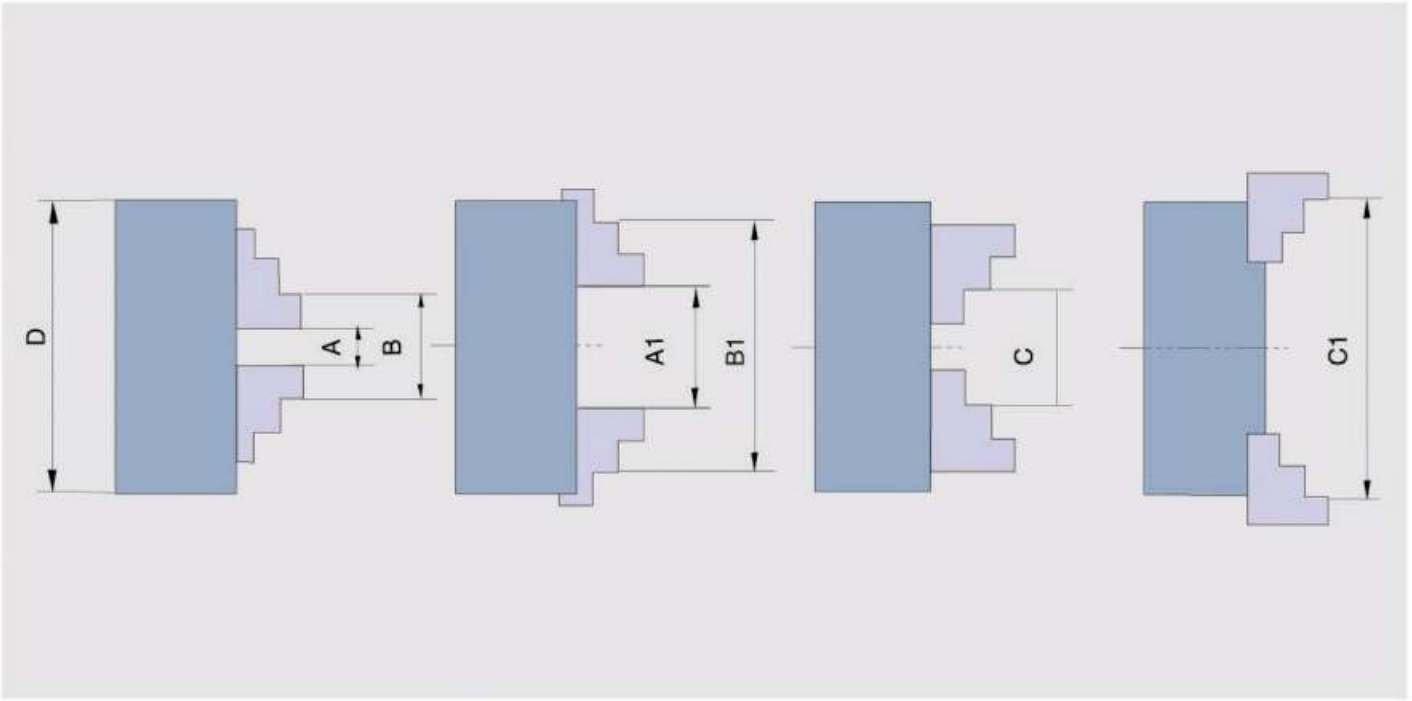

夹持范围
Clamping Range

卡盘规格D Size	正爪 Internal jaw		反爪 External jaw
	夹持范围 Clamping range	撑紧范围 Jamming range	夹持范围 Clamping range
	A–A1	B–B1	C–C1
80	2–22	25–70	22–63
100	2–30	30–90	30–80
125	2.5–40	38–125	38–110
130	3–40	40–130	40–120
160	3–55	50–160	55–145
165	4–60	52–165	55–150
190	4–70	65–190	65–190
200	4–85	65–200	65–200
240	6–100	80–250	90–250
250	6–110	80–250	90–250
315	10–140	95–315	100–315
320	11.5–145	95–320	110–320
325	11.5–165	95–350	110–340
380	11.5–210	95–400	110–400
400	15–210	120–400	120–400
500	25–280	150–500	150–500
630	50–350	170–630	170–630

K11、K11G——三爪自定心卡盘卡爪
THREE-JAW SELF-CENTRING CHUCK JAWS

SAN OU CHUCK



- 卡爪分为：整体爪，A型、D型分离爪，C型分离爪，软爪
  可按客户要求提供各型硬卡爪及软爪
  Hard jaws include one-piece jaws and two-piece jaws for form A、D、CAll kinds of hard jaws can be provided as the request of customers.
- 可供单独选配如下卡爪



整体爪
One-piece jaw

A/D型分离爪
Two-piece jaws for Form A,D

整体爪 One-piece Jaws

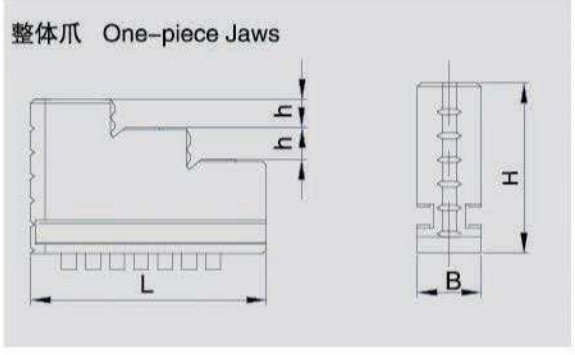

规格 Size	80	100	125	130	160	165	190	200	240	250	315 320 325 380
L	32	42	56	56	70	70	72	85	105	105	126
B	12	15	16	16	18.5	18.5	22	22	27	27	36
H	33	38	45	45	54	54	57	61	69	69	86
h	6.5	7	9	9	12	12	12	12	12	12	18

※ 包括正爪、反爪各一副
The chuck with one-piece jaw is provided with each set of internal and external ones.
11 three-jaw short tape series.

A型、D型分离爪 Two-Piece Jaws for Form A，D

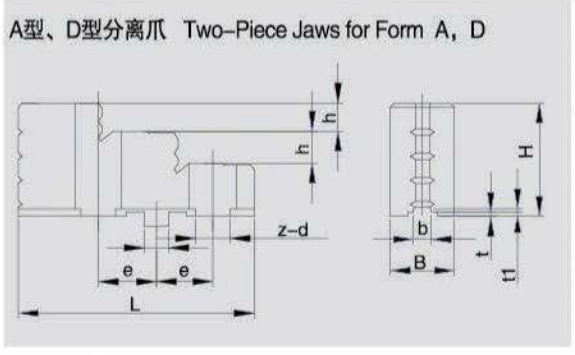

规格 Size	160	200	250	315	325		380	400	500	630
L	67	80	95	108	108	130	130	130	132	132
B	25	30	36	45	45		45	45	45	45
H	41	45	53	61	61	70	70	70	82	82
h	9	10.5	13.5	17.5	17.5	17	17	17	22	22
a	12.675	12.675	19.025	19.025	19.025		19.025	19.025	19.025	19.025
b	7.94	7.94	12.7	12.7	12.7		12.7	12.7	12.7	12.7
e	19	22.2	27	31.75	31.75	38.1	38.1	38.1	38.1	38.1
t	3	3	3	3	3	6	6	6	6	6
t1	4	4	4	4	4		4	4	4	4
z-d	2-11	2-11	2-13	2-13	2-13	2-18	2-18	2-18	2-22	2-22

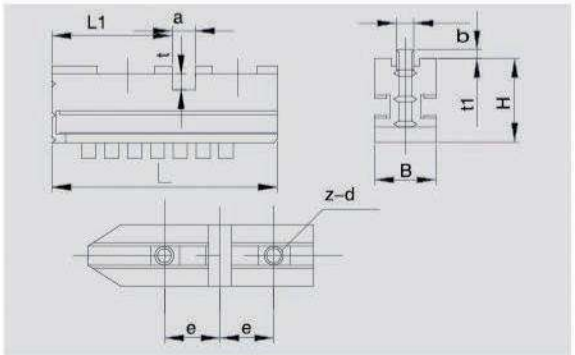

规格 Size	160	200	250	315	325		380	400	500	630
L	64	80	98	110	110	114	130	130	130	132
L1	29	34.9	39.7	47.6	47.6	47.6	45	45	45	45
B	20	22	27	36	36		36	36	45	50
H	33	35	38	42	42	46	46	46	55	50
a	12.675	12.675	19.025	19.025	19.025		19.025	19.025	19.025	19.025
b	7.94	7.94	12.7	12.7	12.7		12.7	12.7	12.7	12.7
e	19	22.2	27	31.75	31.75	38.1	38.1	38.1	38.1	38.1
t	4	4.2	4.2	4.2	4.2	7	7	7	7	7
t1	3	3	3	3	3		3	3	3	3
z-d	2-M10	2-M10	2-M12	3-M12	3-M12	3-M16	3-M16	3-M16	4-M20	5-M20

※包括顶爪和基爪两部分，规格为325，380的A型分离爪和所有规格的D型分离爪，基爪不带夹持弧。
The jaws are comosed of top jaws and master jaws, Master jaws for from A size 325, 380 and from D without clamp arc.

K11——三爪自定心卡盘卡爪

THREE-JAW SELF-CENTRING CHUCK JAWS

SAN OU CHUCK



卡爪分为：整体爪，A型、D型分离爪，C型分离爪，软爪
可按客户要求提供各型硬卡爪及软爪
Hard jaws include one-piece jaws and two-piece jaws for form A、D、CAll kinds of hard jaws can be provided as the request of customers.

可供单独选配如下卡爪



C型分离爪
Two – piece Jaws for FormC

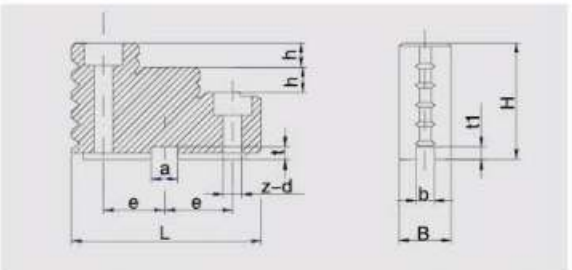

规格 Size	L	B	H	h	a	b	e	t	t1	z-d
200	88	22	44	12	13	11	28	7	3	2-9
240	108	27	46	12	13	13	35	7	3	2-11
250	108	27	46	12	13	13	35	7	3	2-11

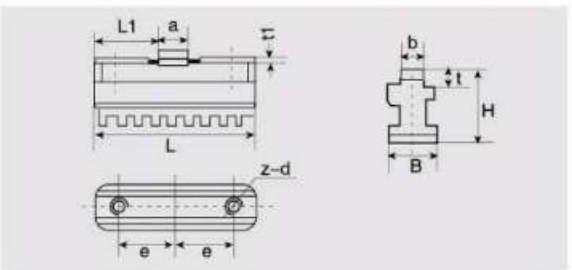

规格 Size	L	L1	B	H	a	b	e	t	t1	z-d
200	76	31.5	22	36	13	11	28	6	2	2-M8
240	95	41	27	39	13	13	35	6	2	2-M10
250	95	41	27	39	13	13	35	6	2	2-M10

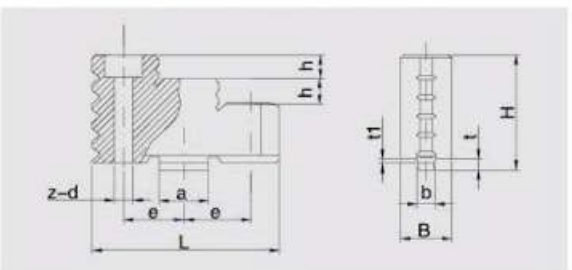

规格 Size	L	B	H	h	a	b	e	t	t1	z-d
320	127	36	59.5	17	28	15	44	7.5	2.8	2-13
325	127	36	59.5	17	28	15	44	7.5	2.8	2-13
380	127	36	59.5	17	28	15	44	7.5	2.8	2-13

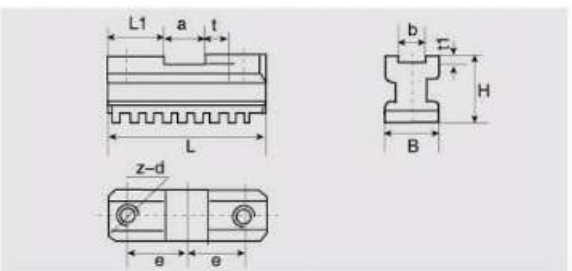

规格 Size	L	L1	B	H	a	b	e	t	t1	z-d
320	114	43	36	40	28	15	44	8.5	3.5	2-M12
325	114	43	36	40	28	15	44	8.5	3.5	2_M12
380	114	43	36	40	28	15	44	8.5	3.5	2-M12

※包括顶爪和基爪。
The jaws are comosed of top jaws and master jaws.



卡爪分为：整体爪，A型、D型分离爪，C型分离爪，软爪
可按客户要求提供各型硬卡爪及软爪
Hard jaws include one-piece jaws and two-piece jaws for form A、D、CAll kinds of hard jaws can be provided as the request of customers.

可供单独选配如下卡爪
K11、K10、K12等系列卡盘可按客户要求提供各种软卡爪。
软卡爪包括：整体软爪和分离软爪（C型、A型）。
All kinds of soft jaws can be provided as the request of customers for K11，K10，K12 series chucks.
Soft jaws imclude one-piece soft jaws and two-piece soft jaws (fromC、A)



软爪
Soft jaws

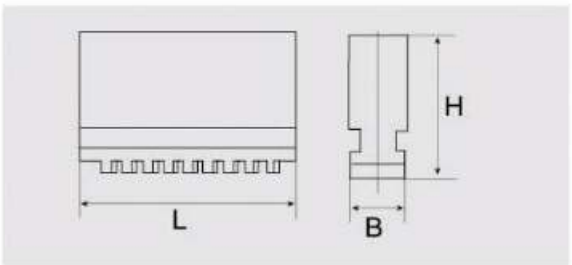

整体软爪 One-piece soft jaws

型号规格 Model	RZ1180	RZ11100	RZ11125	RZ11130	RZ11160	RZ11165	RZ11190	RZ11200	RZ11240	RZ11250	RZ11315 RZ11320	RZ11325 RZ11380
L	32	42	56	56	70	70	72	85	105	105	130	130
B	12	15	16	16	18.5	18.5	18.5	22	27	27	36	36
H	32	38	45	45	54	54	54	61	69	69	91	91

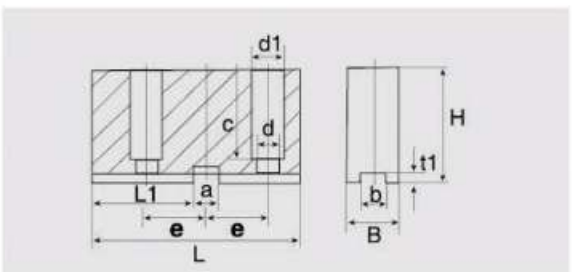

软顶爪（C型） Soft top jaws （type C）

型号规格 Model	L	L1	B	H	a	b	e	t	t1	c	d	d1
RZ11200C	93	46	25	50	13	11	28	7	3	39	9	15
RZ11240C	113	58	27	58	13	13	35	7	3	48	11	17
RZ11250C	113	58	27	58	13	13	35	7	3	48	11	17

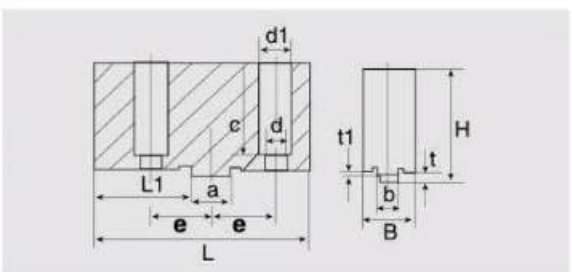

型号规格 Model	L	L1	B	H	a	b	e	t	t1	c	d	d1
RZ11320C	137	64	36	75	28	15	44	7.5	2.8	60.5	13	15
RZ11325C	137	64	36	75	28	15	44	7.5	2.8	60.5	13	17
RZ11380C	137	64	36	75	28	15	44	7.5	2.8	60.5	13	17

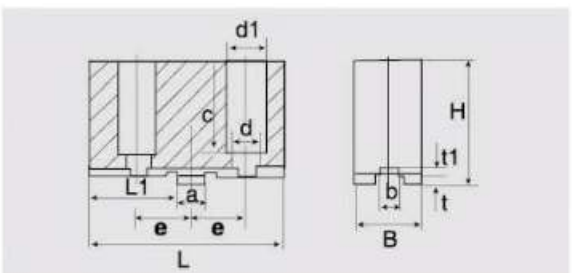

软顶爪（A型） Soft top jaws （type A）

规格 Size	L	L1	B	H	a	b	e	t	t1	c	d	d1
RZ11160A	74	36	25	47	12.675	7.94	19	3	4	36	11	17
RZ11200A	90	43	30	55	12.675	7.94	22.2	3	4	41	11	17
RZ11250A	110	50	36	63	19.025	12.7	27	3	4	50	13	20
RZ11315A RZ11325A	120	57	45	70	19.025	12.7	31.75	3	4	54	13	20
RZ11380A RZ11325A	135	67	45	85	19.025	12.7	38.1	6	4	66	18	26
RZ11400A	135	67	45	85	19.025	12.7	38.1	6	4	66	18	26
RZ11500A	160	80	50	90	19.025	12.7	38.1	6	4	68	22	32

K10——二爪自定心卡盘
TWO-JAW SELF-CENTRING CHUCKS

SAN OU CHUCK



适用范围：加工各种异形工件和不规则形体零件。

特征：

- 1.高精度的短圆柱连接。
- 2.提供各种形式夹爪，夹爪为分离爪，顶爪为软爪。
- 3.易损部件都经过特殊淬火处理，有效地提高耐磨性和使用寿命。
- 4.较高的自紧定心精度，满足夹持的要求。

Application: Recommended for processing all kinds of special comp-onents and components in special shape.

Features:

- 1.High precision short cylindrical center mounting.
- 2.All kinds of jaws can be provided, the jaws are two-piece ones and the top jaws are soft ones.
- 3.Flimsy parts are specifically engineered by quenching, for greater durability and extended life.
- 4.High self-centring precision to the superior gripping force demands.



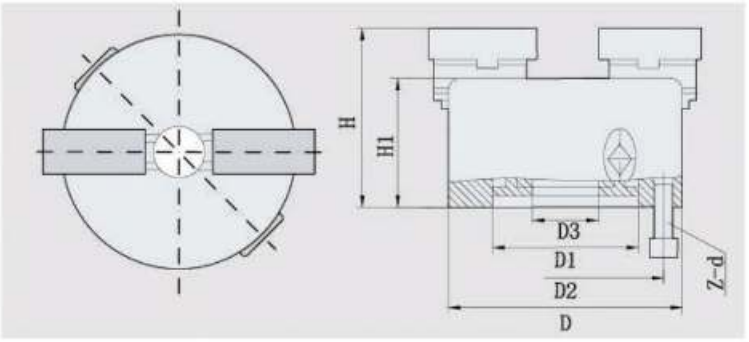



尺寸、性能参数 Dimension characterstic parameters

规格D Size	D1	D2	D3	H	H1	h	z-d	净重kg N.W.	报价 Unit Price
125F	95	108	30	97	58	4	3-M8		
130F	100	115	30	99	60	3.5	3-M8		
160F	130	142	45	115	65	5	3-M8		
200F	165	180	65	132	75	5	3-M10		
250F	206	226	80	146	80	5	3-M12		
325F	272	296	100	184	96	12	3-M16		
380F	325	350	145	186	98	6	3-M16		

K10短锥系列其连接尺寸同K11三爪短锥系列。
K10 short taper series have the same mountong dimensions as K11 three-jaw short tape series.

K12——四爪自定心卡盘
FOUR-JAW SELF-CENTRING CHUCKS

SAN OU CHUCK



特征：

- 1.短圆柱连接形式。
- 2.K12型卡盘配带整体爪（正卡爪和反卡爪各一副）。
- 3.K12A、K12 C和K12D型卡盘卡爪为分离爪形式，可调整为正卡爪或反卡爪使用。
- 4.K12A和K12D型卡盘卡爪符合ISO3442标准。
- 5.K12C型卡盘卡爪为传统结构的分离爪。
- 6.可提供各种形式的软卡爪。
- 7.按用户需求，可提供前穿螺钉安装方式卡盘。

Features:

- 1.Short cylindrical center mounting.
- 2.Model K12 chucks are provided with one-piece jaws(which include a set of internal jaws and a set of external ones).
- 3.The jaws for K12A,K12C and K12D chucks are composed of two-piece jaws. They can perfrom as either internal jaws through adjustment.
- 4.The jaws for K12A and K12D chucks conform to ISO3442 standard.
- 5.Model K12C chucks are supplied with traditional two-piece jaws.
- 6.We can provide all kinds of soft jaws.
- 7.As requested,we can provide chucks mounted from front.



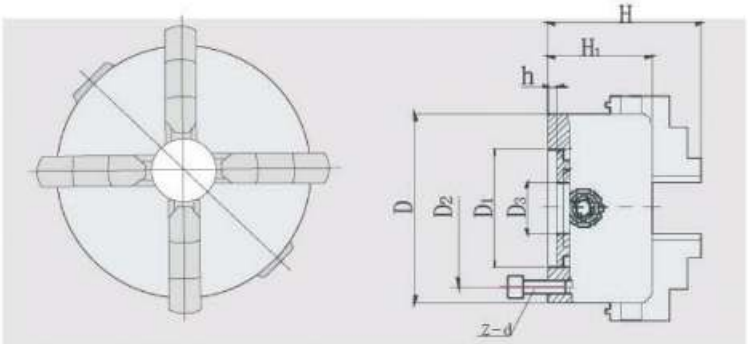



尺寸、性能参数 Dimension characterstic parameters

规格D Size	D1	D2	D3	H	H1	h	Z-d	最大输入扭矩Nm Max.input torque	极限转r/min Max.speed	重量 Weight(kg)	报价 Unit Price
80G	55	66	16	66	50	3.5	3-M6	40	4000		
100	72	84	22	75	55	3.5	3-M8	60	3500		
125	95	108	30	84	58	4	3-M8	100	3000		
130	100	115	30	86	60.5	3.5	3-M8	100	3000		
160	130	142	45	95	65	5	3-M8	160	2500		
165	130	145	40	96.5	67.5	4.5	3-M8	160	2500		
190	155	172	54	115	75	5	3-M10	250	2000		
200	165	180	65	113	75	5	3-M10	250	2000		
240	195	215	70	124	80	8	3-M12	320	1600		
250	206	226	80	124	80	5	3-M12	320	1600		
315	260	285	100	141.5	90	6	3-M16	400	1200		
320	270	290	100	148.5	95	11	3-M16	400	1200		
325	272	296	100	149.5	97	12	3-M16	400	1200		
380	325	350	145	156	102.5	6	3-M16	500	1000		
400	340	368	145	155	101.5	6	3-M16	500	1000		
500	440	465	210	174	115.4	6	6-M16	630	800		
630	560	595	280	204	135	7	6-M16	630	600		
800	710	760	385	239	150	8.5	6-M20	1000	500		
1000A	910	950	460	295	180	9	6-M24	1200	400		
1250	1060	1150	550	341	228	11	6-M30	1300	320		

K12短锥系列其连接尺寸同K11三爪短锥系列。
K12 short taper series have the same mountong dimensions as K11 three jaw short tape series

K12 ——四爪自定心分离卡盘

K12-FOUR JAW SAW SELF CENTERING SEPARATION CHUCK

SAN OU CHUCK



特征：

- 1.短圆柱连接形式。
- 2.K12型卡盘配带整体爪（正卡爪和反卡爪各一副）。
- 3.K12A、K12 C和K12D型卡盘卡爪为分离爪形式，可调整为正卡爪或反卡爪使用。
- 4.K12A和K12D型卡盘卡爪符合ISO3442标准。
- 5.K12C型卡盘卡爪为传统结构的分离爪。
- 6.可提供各种形式的软卡爪。
- 7.按用户需求，可提供前穿螺钉安装方式卡盘。

Features:

- 1.Short cylindrical center mounting.
- 2.Model K12 chucks are provided with one-piece jaws(which include a set of internal jaws and a set of external ones.
- 3.The jaws for K12A,K12C and K12D chucks are composed of two-piece jaws. They can perfrom as either internal jaws through adjustment.
- 4.The jaws for K12A and K12D chucks conform to ISO3442 standard.
- 5.Model K12C chucks are supplied with traditional two-piece jaws.
- 6.We can provide all kinds of soft jaws.
- 7.As requested,we can provide chucks mounted from front.



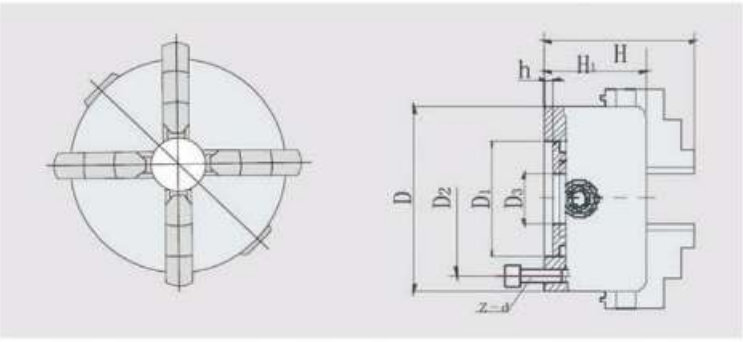



尺寸、性能参数 Dimension characterstic parameters

规格D Size	D1	D2	D3	H	H1	H2	h	Z-d	最大输入扭矩Nm Max input torque	极限转r/min Max speed	重量 Weight(kg)	报价 Unit Price
160A	130	142	450	109.5	65	71.5	5	3-M8	160	2500		
200C	165	180	65	122	75	78	5	3-M10	250	2000		
200A	165	180	65	122	75	80	5	3-M10	250	2000		
240C	195	215	70	130	80	84	8	3-M12	320	1600		
250C	206	226	80	130	80	84	5	3-M12	320	1600		
250A	206	226	80	136	80	86	5	3-M12	320	1600		
315A	260	285	100	152.5	90	95	6	3-M16	400	1200		
320C	270	290	100	154.5	95	102.5	11	3-M16	400	1200		
325C	272	296	100	155.5	97	103.5	12	3-M16	400	1200		
325A	272	296	100	160.5	97	102.5	12	3-M16	400	1200		
380C	325	350	145	158	102.5	106	6	3-M16	500	1000		
380A	325	350	145	175	102.5	111	6	3-M16	500	1000		
400A	340	368	145	174	101.5	110	6	3-M16	500	1000		
500A	440	465	210	202	115.4	126	6	6-M16	630	800		
630A	560	595	280	220	135	144	7	6-M16	800	600		
800A	710	760	385	249	150	167	8.5	6-M20	1000	500		
1000A	910	950	460	295	180	190	10	6-M24	1200	600		
1250A	1160	1200	660	281	178	187	10	6-M24	1300	500		

K12短锥系列其连接尺寸同K11三爪短锥系列。
K12 short taper series have the same mountong dimensions as K11 three jaw short tape series

K12——四爪自定心卡盘卡爪

FOUR-JAW SELF-CENTRING CHUCK JAWS

SAN OU CHUCK



- 卡爪分为：整体爪，A型、D型分离爪，C型分离爪，软爪
  可按客户要求提供各型硬卡爪及软爪
- Hard jaws include one-piece jaws and two-piece jaws for form A、D、C
  All kinds of hard jaws can be provided as the request of customers.
  可供单独选配如下卡爪



整体爪
One-piece jaw



A/D型分离爪
Two-piece jaws for Form A,D

整体爪 One-piece Jaws

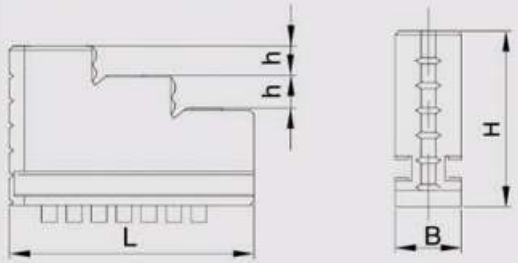

规格 Size	80	100	125	130	160	165	190	200	240	250	315 320 325 380
L	32	42	56	56	70	70	72	85	105	105	126
B	12	15	16	16	18.5	18.5	22	22	27	27	36
H	33	38	45	45	54	54	57	61	69	69	86
h	6.5	7	9	9	12	12	12	12	12	12	18

※ 包括正爪、反爪各一副
The chuck with one-piece jaw is provided with each set of internal and external ones.
11 three-jaw short tape series.

A型、D型分离爪上爪

Two-piece top jaws for form A,D

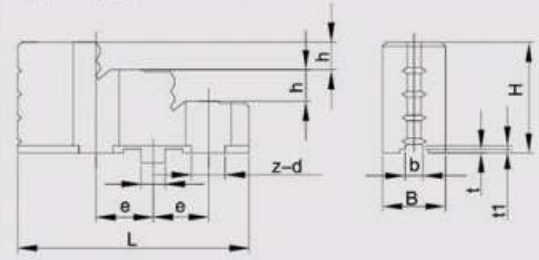

规格 Size	160	200	250	315	325	380	400
L	67	80	95	108	108 130	130	130
B	25	30	36	45	45	45	45
H	41	45	53	61	61 70	70	70
h	9	10.5	13.5	17.5	17.5 17	17	17
a	12.675	12.675	19.025	19.025	19.025	19.025	19.025
b	7.94	7.94	12.7	12.7	12.7	12.7	12.7
e	19	22.2	27	31.75	31.75 38.1	38.1	38.1
t	3	3	3	3	3 6	6	6
t1	4	4	4	4	4	4	4
z-d	2-11	2-11	2-13	2-13	2-13 2-18	2-18	2-18

A型、D型分离爪基爪

Two-piece base jaws for form A,D

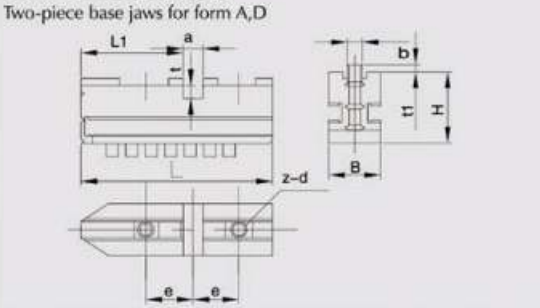

规格 Size	160	200	250	315	325	380	400
L	64	80	98	110	110 114	130	130
L1	29	34.9	39.7	47.6	47.6 47.6	45	45
B	20	22	27	36	36	36	36
H	33	35	38	42	42 46	46	46
a	12.675	12.675	19.025	19.025	19.025	19.025	19.025
b	7.94	7.94	12.7	12.7	12.7	12.7	12.7
e	19	22.2	27	31.75	31.75 38.1	38.1	38.1
t	4	4.2	4.2	4.2	4.2 7	7	7
t1	3	3	3	3	3	3	3
z-d	2-M10	2-M10	2-M12	3-M12	3-M12 3-M16	3-M16	3-M16

K12——四爪自定心卡盘卡爪
FOUR-JAW SELF-CENTRING CHUCK JAWS

SAN OU CHUCK



- 卡爪分为：整体爪，A型、D型分离爪，C型分离爪，软爪
  可按客户要求提供各型硬卡爪及软爪
- Hard jaws include one-piece jaws and two-piece jaws for form A、D、C
  All kinds of hard jaws can be provided as the request of customers.
  可供单独选配如下卡爪



C型分离爪
Two-piece jaws for Form C

C型分离爪上爪
Two-piece top jaws for form C

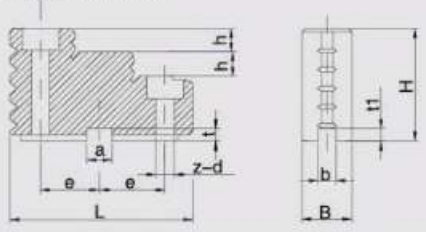

规格 Size	L	B	H	h	a	b	e	t	t1	z-d
200	88	22	44	12	13	11	28	7	3	2-9
240	108	27	46	12	13	13	35	7	3	2-11
250	108	27	46	12	13	13	35	7	3	2-11

C型分离爪基爪
Two-piece base jaws for form C

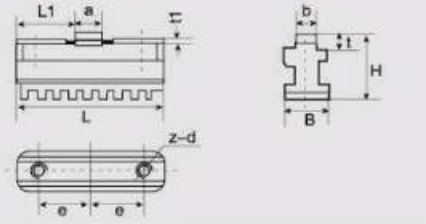

规格 Size	L	L1	B	H	a	b	e	t	t1	z-d
200	76	31.5	22	36	13	11	28	6	2	2-M8
240	95	41	27	39	13	13	35	6	2	2-M10
250	95	41	27	39	13	13	35	6	2	2-M10

C型分离爪上爪
Two-piece top jaws for form C

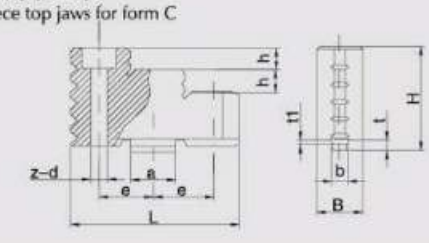

规格 Size	L	B	H	h	a	b	e	t	t1	z-d
320	127	36	59.5	17	28	15	44	7.5	2.8	2-13
325	127	36	59.5	17	28	15	44	7.5	2.8	2-13
380	127	36	59.5	17	28	15	44	7.5	2.8	2-13

C型分离爪基爪
Two-piece base jaws for form C

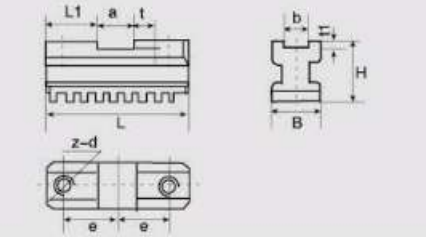

规格 Size	L	L1	B	H	a	b	e	t	t1	z-d
320	114	43	36	40	28	15	44	8.5	3.5	2-M12
325	114	43	36	40	28	15	44	8.5	3.5	2-M12
380	114	43	36	40	28	15	44	8.5	3.5	2-M12



- 卡爪分为：整体爪，A型、D型分离爪，C型分离爪，软爪
  可按客户要求提供各型硬卡爪及软爪
- Hard jaws include one-piece jaws and two-piece jaws for form A、D、CAll kinds of hard jaws can be provided as the request of customers.
  可供单独选配如下卡爪



软爪
Soft jaws

整体软爪
One-piece soft jaws

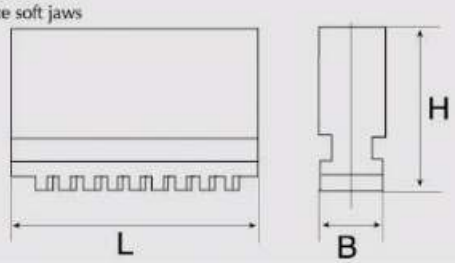

整体软爪 One_piece soft jaws

型号规格 Model	RZ1180	RZ11100	RZ11125	RZ11130	RZ11160	RZ11165	RZ11190	RZ1120	RZ11240	RZ11250	RZ11315 RZ11320	RZ11325 RZ11380
L	32	42	56	56	70	70	72	85	105	105	130	130
B	12	15	16	16	18.5	18.5	18.5	22	27	27	36	36
H	32	38	45	45	54	54	54	61	69	69	91	91

软顶爪（C型）
Soft top jaws(type C)

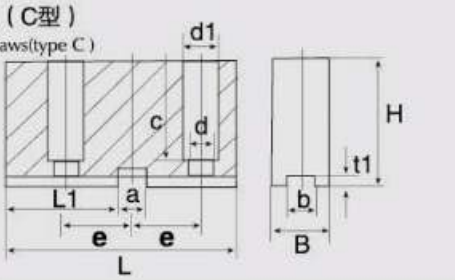

软顶爪（C型） Soft top jaws （type C）

型号规格 Model	L	L1	B	H	a	b	e	t	t1	c	d	d1
RZ11200C	93	46	25	50	13	11	28	7	3	39	9	15
RZ11240C	113	58	27	58	13	13	35	7	3	48	11	17
RZ11250C	113	58	27	58	13	13	35	7	3	48	11	17

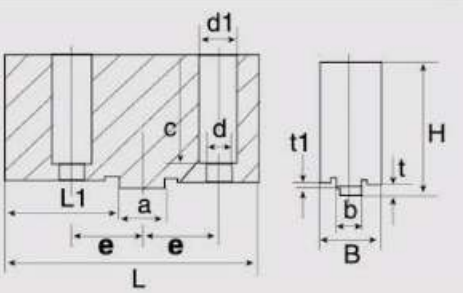

型号规格 Model	L	L1	B	H	a	b	e	t	t1	c	d	d1
RZ11320C	137	64	36	75	28	15	44	7.5	2.8	60.5	13	15
RZ11325C	137	64	36	75	28	15	44	7.5	2.8	60.5	13	17
RZ11380C	137	64	36	75	28	15	44	7.5	2.8	60.5	13	17

软顶爪（A型）
Soft top jaws(type A)

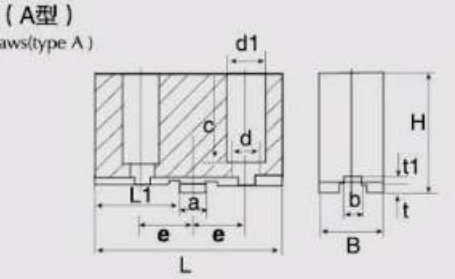

软顶爪（A型） Soft top jaws （type A）

规格 Size	L	L1	B	H	a	b	e	t	t1	c	d	d1
RZ11160A	74	36	25	47	12.675	7.94	19	3	4	36	11	17
RZ11200A	90	43	30	55	12.675	7.94	22.2	3	4	41	11	17
RZ11250A	110	50	36	63	19.025	12.7	27	3	4	50	13	20
RZ11315A RZ11325A	120	57	45	70	19.025	12.7	31.75	3	4	54	13	20
RZ11380A RZ11325A	135	67	45	85	19.025	12.7	38.1	6	4	66	18	26
RZ11400A	135	67	45	85	19.025	12.7	38.1	6	4	66	18	26

K13——六爪自定心卡盘
SIX-JAW SELF-CENTRING LATHE CHUCK

SAN OU CHUCK





1.短圆柱连接形式。
2.K13型卡盘配带台阶形卡爪。
3.适用于各种薄壁工件的夹持加工。
4.尤其适用于各种柄类刃具的磨削夹持。

1.Short cylindrical center mounting.
2.K13 chucks are matched with stepped jaws.
3.Suitable for clampong and machining the thin-walled somponents.
4.Especially suitable for machining all kinds of cutting tools with handles.

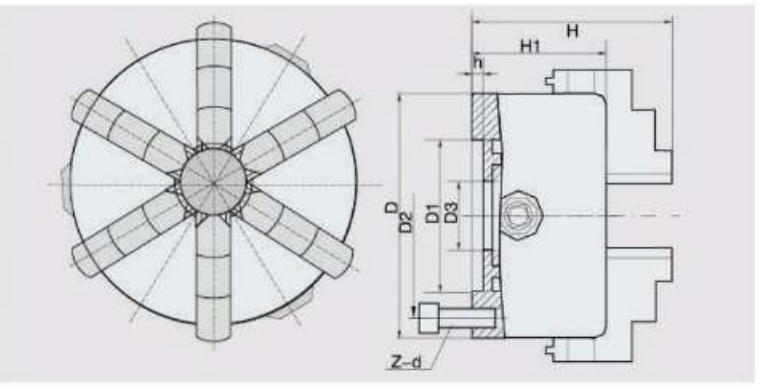

尺寸、性能参数 Dimension characterstic parameters

规格 Size	D	D1	D2	D3	H	H1	h	z-d	报价 Unit Price
160	160	130	142	45	95	65	5	3-M8	
165	165	130	145	40	96.5	67.5	4.5	3-M8	
200	200	165	180	65	113	75	5	3-M10	
250	250	206	226	80	124	80	5	3-M12	





1.短圆柱连接形式。
2.K13-Ⅱ型卡盘配带斜坡形卡爪。
3.适用于各种薄壁工件的夹持加工。
4.尤其适用于各种柄类刃具的磨削夹持。

1.Short cylindrical center mounting.
2.K13-Ⅱ chucks are matched with sloped jaws.
3.Suitable for clampong and machining the thin-walled somponents.
4.Especially suitable for machining all kinds of cutting tools with handles.

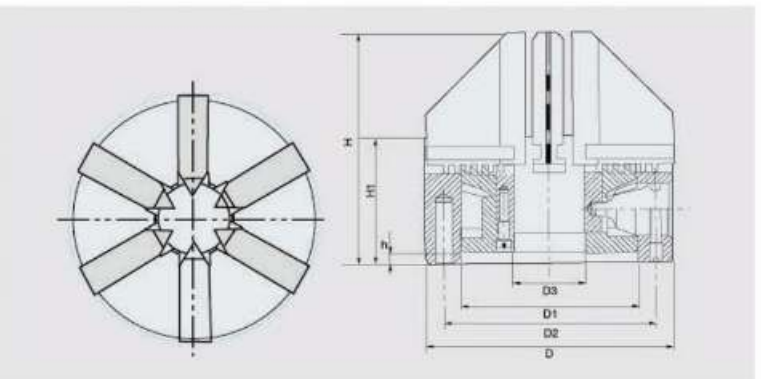

尺寸、性能参数 Dimension characterstic parameters

规格 Size	D	D1	D2	D3	H	H1	h	z-d	报价 Unit Price
100	112	80	95	32	105	58	4	3-M8	
125	125	95	108	35	104	58	4	3-M8	
130	130	100	115	35	106	60.5	4	3-M8	

KM31(33)——精密可调自定心卡盘

ADJUSTABLE PRECISION SELF-CENTRING CHUCK

SAN OU CHUCK





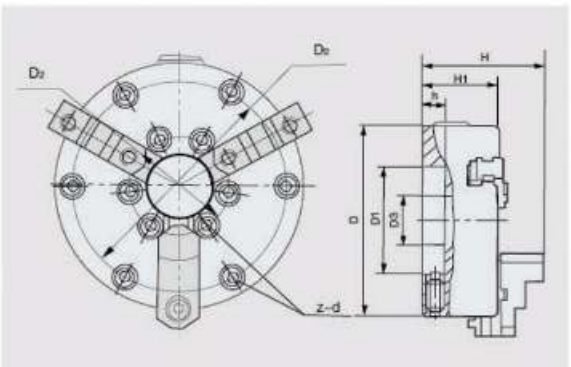

特征：

1. 短圆柱连接形式
2. KM31（DG）为三爪卡盘，KM33（DG）为六爪卡盘
3. 具有可调结构，夹持精度可达到0.013mm。有4颗微调整螺丝。
4. 三鸥卡盘可用于所有使用普通卡盘的机加工操作，以及普通三爪自定心卡盘不适用的操作。
5. 高精度、多功能性及长寿命使三鸥卡盘在现今车间极具价值，在工具车间不可或缺。
6. 六爪自定心卡盘加紧所需压力较小，各爪形变低。对薄壁和第二道工序较理想。省去了弹簧套筒夹头。
7. 钢体
8. 盘体由优质钢构造，使其在机床上高速运行时较安全。

Features:

1. Short cylindrical center mounting.
2. KM31（DG）are of three-jaw and KM33（DG）are of six-jaw.
3. With adjustable structure, the clamping precision can reach0.013mm. 4 micro adjustment screws are provided.
4. SANOU Chucks can be used for all machining operations where universal chucks are used , along with applications where universal scroll chucks are unsuitable.
5. Outstanding accuracy, versatility and long life make SANOU chucks invaluable in the modern workshop and indispensible in the toolroom.
6. The 6 jaws grip firmly with less pressure and less distortion per jaw. Ideal for thin wall and second operation work.Eliminates the need for spring collets.
7. steel body
8. Chuck body is constructed of high quality steel, making it safe to run at high lathe speeds.

尺寸、性能参数 Dimension characterstic parameters

规格 Size	D	D1	D2	D3	H	H1	H2	h	z-d	极限转速 Max.speed	净重kg Net WT.	报价 Unit Price
KM31125(5")A(DG)	125	55	108	35	100	60	64.8	15	3-M8	5500	6	
KM31160(6")A(DG)	160	86	140	42	114.4	71	76	18	3-M10	4600	10	
KM33160(6")A(DG)	160	86	140	42	114.4	71	76	18	3-M10	3200	11	
KM31200(8")A(DG)	200	110	176	55	125.5	80.5	85.3	20	3-M10	4000	20	
KM33200(8")A(DG)	200	110	176	55	125.5	80.5	85.3	20	3-M10	2800	21	
KM31250(10")A(DG)	250	145	224	76	117.5	94.5	99.3	20	3-M12	3500	31	
KM33250(10")A(DG)	250	145	224	76	117.5	94.5	99.3	20	3-M12	2400	33	
KM31315(12")A(DG)	315	180	286	103	151.4	94.5	99.5	20	3-M16	2800	53	
KM33315(12")A(DG)	315	180	286	103	151.4	94.5	99.5	20	3-M16	2400	55	

K31——精密可调自定心卡盘

ADJUSTABLE PRECISION SELF-CENTRING CHUCK

SAN OU CHUCK





特征：

- 1.短圆柱连接形式
- 2.具有可调结构,能满足精密加工的需要。

Features:

- 1.Short cylindrical center mounting.
- 2.The centering precision is improved with adjustable structure to meet the needs of precision machining.

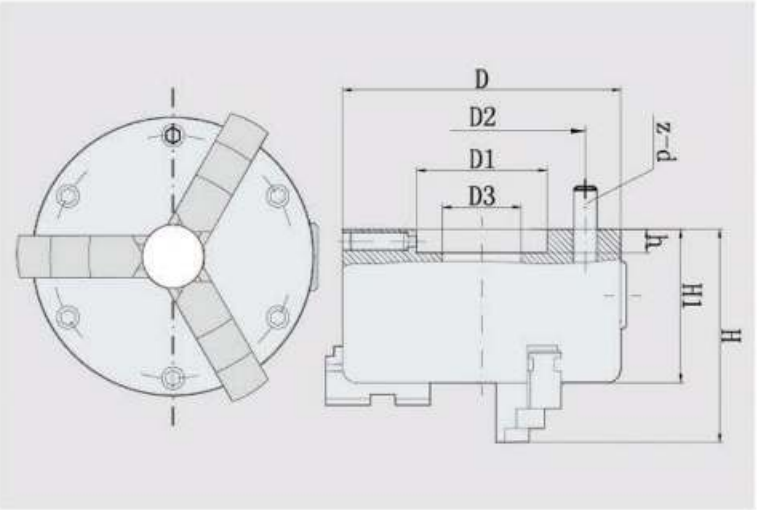



尺寸、性能参数 Dimension characterstic parameters

规格 Size	D	D1	D2	D3	H	H1	h	z-d	净重kg Net WT.	报价 Unit Price
80	80	55	66	16	70.5	54.4	8	3-M6	4.5	
100	100	72	84	22	79.5	60	8	3-M8	5	
125	125	95	108	30	91	65	10	3-M8	5.7	
130	130	55	113	30	88	62	11.5	3-M8	6	
165	165	80	145	40	102	72	13.5	3-M8	11	
167A	167	80	147	44	144.5	70	16	3-M10	11	
200	204	120	180	65	112	78	13.5	3-M10	17	
210A	210	120	190.5	63	124	76	16	3-M10	17.5	
250C	250	250	226	80	138	88	18	3-M12	26	
325C	325	325	296	100	158.5	100	20.5	3-M16	48	

K72——四爪单动卡盘
FOUR JAW INDEPENDENT CHUCKS

SAN OU CHUCK





适用范围：有色金属及塑料，非金属等切削加工。

特征：

- 1.高精度短圆柱连接。
- 2.易损部件都经过特殊淬火处理，有效地提高耐磨性和使用寿命。
- 3.单动调整中心，可用于各种形状加工，更大的夹紧力。

Application: Recommended for processing of non-ferrous metals, non-metals like plastics and so on.

Features:

- 1.High precision short cylindrical center mounting.
- 2.Flimsy parts are specifically engineered by quenching, for greater durability and extended life.
- 3.Adjusted independently to center, suitable for processing special with superior gripping force.

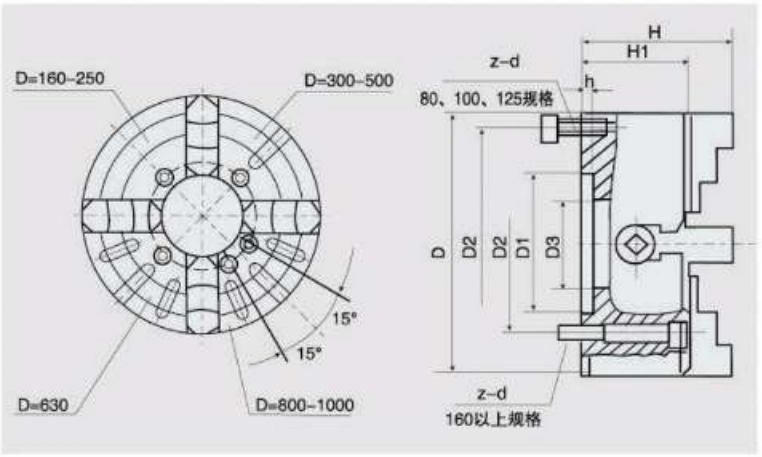



尺寸、性能参数 Dimension characterstic parameters

规格Size mm	D1	D2	D3	H	H1	h	z-d	净重 kg Net WT	极限转速r/min Max.speed
80	55	66	22	59	42	4	3-M6	2.5	4800
100	72	84	25	75	54	4	4-M8	3	4800
125	95	108	30	78	56	6	4-M8	5	4200
160	65	95	55	93	65	5	4-M10	9	3800
200	80	112	70	107.5	75	6	4-M10	15	2100
250	110	130	100	131	90	6	4-M12	23	1800
300	152	130	95	144	100	6	4-M12	39	1400
320	140	165	115	144	100	6	4-M16	40	1400
350	130	168	115	144	100	6	4-M16	53	1400
400	160	185	125	157	110	8	4-M16	55	950
450	180	205	160	148	101	8	4-M16		
500	200	236	170	171	116	8	4-M20	102	600
630	220	258	180	195	128	10	4-M20	159	500
800	250	300	220	225	145	12	8-M20		
1000	320	370	305	259	170	15	8-M20		
1250	400	500	385	273	185	15	8-M20		
1400	400	500	305	246	155	15	8-M20		
1600	420	520	320	266	157	20	8-M24		

K72——四爪单动锻钢卡盘

FOUR-JAW INDEPENDENT CHUCKS(FORGED STEEL)

SAN OU CHUCK



适用范围：有色金属及塑料，非金属等切削加工。

特征：

- 1.高精度短圆柱连接。
- 2.易损部件都经过特殊淬火处理，有效地提高耐磨性和使用寿命。
- 3.单动调整中心，可用于各种形状加工，更大的夹紧力。

Application: Recommended for processing of non-ferrous metals, non-metals like plastics and so on.

Features:

- 1.High precision short cylindrical center mounting.
- 2.Flimsy parts are specifically engineered by quenching, for greater durability and extended life.
- 3.Adjusted independently to center, suitable for processing special with superior gripping force.



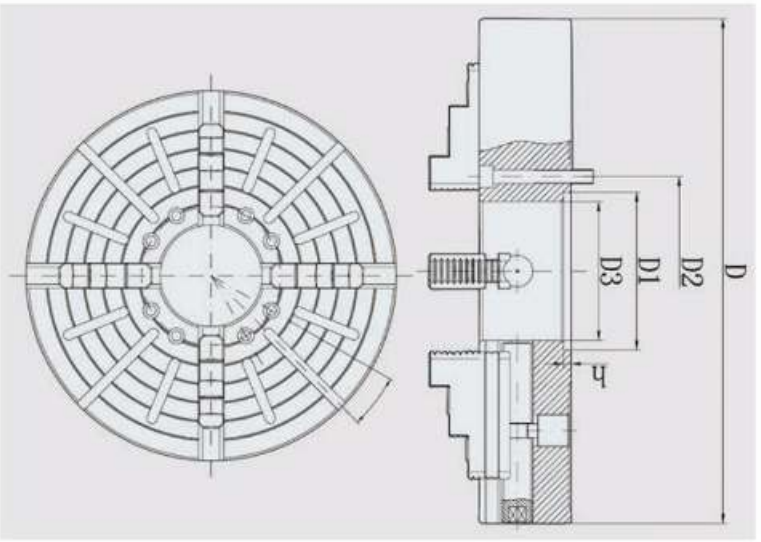

规格Size mm	D1	D2	D3	H1	h	z-d	净重kg Net WT	极限转速r/min Max.speed
800	250	300	220	145	12	8-M20	/	500
1000	320	370	305	170	15	8-M20	/	400
1250	400	500	385	185	15	8-M20	/	300
1400	400	500	305	155	15	8-M20	1030	
1600	420	520	320	175	18	8-M24	1570	

K72/A2: 穿通螺钉连接
K72/Form A2(mounting form front)





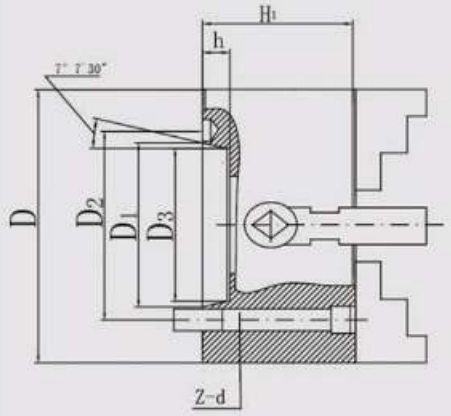

K72/A2: 穿通螺钉连接
K72/Form A2(mounting form front)

规格D Size	主轴头号	D1	D2	D3	H1	h	h1	h2	d1	z-d	净重kg Net WT
160	4	63.513	82.6	45	65	13	10	6.5	14.7	4-M10	9
200	4	63.513	82.6	56	75	13	10	6.5	14.7	4-M10	15
250	4	63.513	82.6	61	80	—	10	6.5	14.7	4-M10	23
320 350	4	63.513	82.6	61	90	—	10	6.5	14.7	4-M10	40，53
200	5	82.563	104.8	56	75	15	12	6.5	16.3	4-M10	15
250	5	82.563	104.8	75	80	15	12	6.5	16.3	4-M10	23
320 350	5	82.563	104.8	79	90	—	12	6.5	16.3	4-M10	40，53
400	5	82.563	104.8	79	95	—	12	6.5	16.3	4-M10	58
200	6	106.375	133.4	56	75	16	13	6.5	19.5	4-M10	15
250	6	106.375	133.4	75	80	16	13	6.5	19.5	4-M12	23
320 350	6	106.375	133.4	95	90	16	13	6.5	19.5	4-M12	40，53
400	6	106.375	133.4	95	95	16	13	6.5	19.5	4-M12	58
500	6	106.375	133.4	103	106	—	13	6.5	19.5	4-M12	102
250	8	139.719	171.4	75	80	18	14	8	24.2	4-M16	23
320 350	8	139.719	171.4	95	90	18	14	8	24.2	4-M16	40，53
400	8	139.719	171.4	125	95	18	14	8	24.2	4-M16	55
500	8	139.719	171.4	136	106	—	14	8	24.2	4-M16	102
320 350	11	196.869	235	95	90	20	16	10	29.4	4-M20	40，53
400	11	196.869	235	125	95	20	16	10	29.4	4-M20	58
500	11	196.869	235	160	106	20	16	10	29.4	4-M20	102
630	11	196.869	235	180	118	20	16	10	29.4	4-M20	159
800	11	196.869	235	185	132	20	16	10	29.4	8-M20	255
1000	11	196.869	235	182	150	20	16	10	29.4	8-M20	—
500	15	285.775	330.2	160	106	21	17	10	35.7	4-M24	102
630	15	285.775	330.2	180	118	21	17	10	35.7	4-M24	159
800	15	285.775	330.2	210	132	21	17	10	35.7	8-M24	255
1000	15	285.775	330.2	280	150	21	17	10	35.7	8-M20	—
1000	15	285.775	330.2	280	150	21	17	10	35.7	8-M22	—
1000	15	285.775	330.2	280	150	21	17	10	35.7	8-M24	—
630	20	412.775	463.6	180	118	23	19	10	42.1	8-M24	159
800	20	412.775	463.6	305	132	23	19	10	42.1	8-M24	—
1000	20	412.775	463.6	305	150	23	19	10	42.1	8-M24	—
1250	20	412.775	463.6	305	165	23	19	10	42.1	8-M24	—
1400	20	412.775	463.6	305	155	23	19	10	42.1	8-M24	—
1600	20	412.775	463.6	305	175	23	19	10	42.1	8-M24	—

K72——短锥四爪单动卡盘

SHORT -TAPER THREE-JAW SELF-CENTRING CHUCKS

SAN OU CHUCK

K72/C型: 拔盘、螺栓锁紧连接

K72/Form C (Mounting with studs and locknuts)





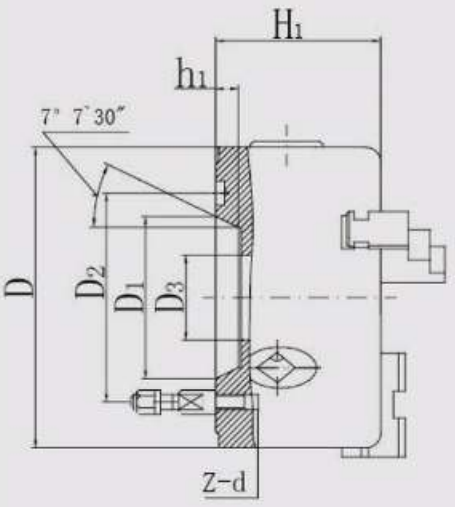

K72/C型: 拔盘、螺栓锁紧连接

K72/Form C (Mounting with studs and locknuts)

规格D Size	主轴头号	D1	D2	D3	H1	h	h1	h2	d1	z-d	净重kg Net WT
160	3	53.975	75	45	67	13	10	—	—	3-M10	9
200	3	53.975	75	51	75	—	10	—	—	3-M10	15
200	4	63.513	85	56	75	13	10	6.5	14.7	3-M10	15
250	4	63.513	85	61	80	—	10	6.5	14.7	3-M10	23
320 350	4	63.513	85	61	90	—	10	6.5	14.7	3-M10	40,53
200	5	82.563	104.8	56	75	15	12	6.5	16.3	4-M10	15
250	5	82.563	104.8	75	80	15	12	6.5	16.3	4-M10	23
320 350	5	82.563	104.8	79	90	—	12	6.5	16.3	4-M10	40,53
400	5	82.563	104.8	79	95	—	12	6.5	16.3	4-M10	55
200	6	106.375	133.4	56	75	16	13	6.5	19.5	4-M12	15
250	6	106.375	133.4	75	80	16	13	6.5	19.5	4-M12	23
320 350	6	106.375	133.4	95	90	16	13	6.5	19.5	4-M12	40,53
400	6	106.375	133.4	95	95	16	13	6.5	19.5	4-M12	55
500	6	106.375	133.4	103	106	—	13	6.5	19.5	4-M12	102
250	8	139.719	171.4	75	80	18	14	8	24.2	4-M16	23
320 350	8	139.719	171.4	95	90	18	14	8	24.2	4-M16	40,53
400	8	139.719	171.4	125	95	18	14	8	24.2	4-M16	55
500	8	139.719	171.4	135	106	—	14	8	24.2	4-M16	106
630	8	139.719	171.4	135	128	—	14	8	24.2	4-M16	168
320 350	11	196.869	235	95	90	20	16	10	29.4	6-M20	40,53
400	11	196.869	235	125	95	20	16	10	29.4	6-M20	68
500	11	196.869	235	160	106	20	16	10	29.4	6-M20	102
630	11	196.869	235	180	128	20	16	10	29.4	6-M20	162
800	11	196.869	235	180	135	20	16	10	29.4	6-M20	244
1000	11	196.869	235	180	145	20	16	10	29.4	6-M20	483
1250	11	196.869	235	180	160	20	16	10	29.4	6-M20	588
500	15	285.775	330.2	160	106	21	17	10	35.7	6-M24	102
630	15	285.775	330.2	180	128	21	17	10	35.7	6-M24	171
800	15	285.775	330.2	180	135	21	17	10	35.7	6-M24	263
1000	15	285.775	330.2	280	145	21	17	10	35.7	6-M24	425
1250	15	285.775	330.2	280	160	21	17	10	35.7	6-M24	597
1400	15	285.775	330.2	280	155	21	17	10	35.7	6-M24	1165
1600	15	285.775	330.2	280	175	21	17	10	35.7	6-M24	1650

K72——短锥四爪单动卡盘

SHORT -TAPER THREE-JAW SELF-CENTRING CHUCKS

SAN OU CHUCK

K72/D型: 拉杆、凸轮锁紧连接
K72/Form D (Mounting with studs and camlocks)



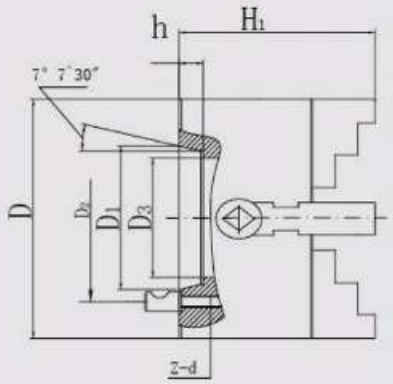

K72/D型: 拉杆、凸轮锁紧连接
K72/Form D (Mounting with studs and camlocks)

规格D Size	主轴头号	D1	D2	D3	H1	h	h1	z-d	净重kg Net WT
160	3	53.975	70.6	45	67	13	10	3-M10X1	9
200	3	53.975	70.6	51	75	—	10	3-M10X1	15
200	4	63.513	82.6	56	75	13	10	3-M10X1	15
250	4	63.513	82.6	61	80	—	10	3-M10X1	23
320 350	4	63.513	82.6	61	90	—	10	3-M10X1	40,53
200	5	82.563	104.8	56	75	15	12	6-M12X1	15
250	5	82.563	104.8	75	80	15	12	6-M12X1	23
320 350	5	82.563	104.8	79	90	—	12	6-M12X1	40,53
400	5	82.563	104.8	79	95	—	12	6-M12X1	55
250	6	106.375	133.4	100	80	16	13	6-M16X1.5	23
320 350	6	106.375	133.4	95	90	16	13	6-M16X1.5	40,53
400	6	106.375	133.4	95	95	16	13	6-M16X1.5	55
500	6	106.375	133.4	103	106	—	13	6-M16X1.5	102
320 350	8	139.719	171.4	115	100	18	14	6-M20X1.5	40,53
400	8	139.719	171.4	125	101	18	14	6-M20X1.5	55
500	8	139.719	171.4	136	116	—	14	6-M20X1.5	106
400	11	196.869	235	165	101	20	16	6-M22X1.5	68
500	11	196.869	235	170	116	20	16	6-M22X1.5	102
630	11	196.869	235	180	128	20	16	6-M22X1.5	159
800	11	196.869	235	180	128	20	16	6-M22X1.5	244
1000	11	196.869	235	180	145	20	16	6-M22X1.5	483
500	15	285.775	330.2	160	106	21	17	6-M24X1.5	106
630	15	285.775	330.2	180	118	21	17	6-M24X1.5	159
800	15	285.775	330.2	180	135	21	17	6-M24X1.5	263
1000	15	285.775	330.2	280	145	21	17	6-M24X1.5	425
1250	15	285.775	330.2	280	160	21	17	6-M24X1.5	597
1400	15	285.775	330.2	280	155	21	17	6-M24X1.5	1165
1600	15	285.775	330.2	280	175	21	17	6-M24X1.5	1650

K72——短锥四爪单动卡盘

SHORT -TAPER THREE-JAW SELF-CENTRING CHUCKS

SAN OU CHUCK



K72--四爪单动卡盘(美标)

K72 Four-jaw independent chucks（American-standard）

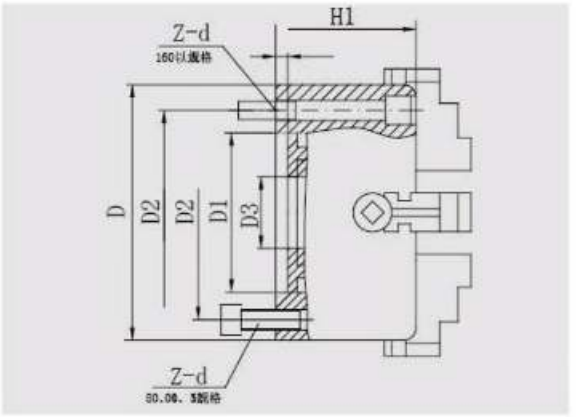

规格D Size	D1	D2	D3	H1	h	z-d	
80	62	72	25	40	5	1/4-20	4
100	79.4	54	25	40	2.5	1/4-20	4
125	70	54	26	43	2.5	5/16-18	4
160	82.5	69.8	42	43	2.5	3/8-16	4
200	110	82.6	50	80	5	7/16-14	4
250	150	104.8	65	85	7	1/2-13	4
315	175	133.4	80	95	7	5/8-11	4
400	200	17.4	100	105	10	5/8-11	4
500	270	235	125	120	12	3/4-10	4
630	270	235	160	140	12	3/4-10	4
800	380	330.2	200	160	12	7/8-9	4
900	370	330	190	170	18	1-8	8



K72卡爪

K72 Jaws

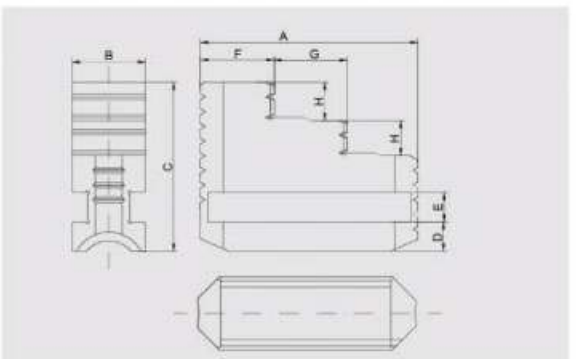

型号	A	B	C	D	E	F	G	H
80	33	15	33.2	5.5	7	13	13	7
100	43	16	41	7.8	8	14	16	8
125	53	18	42	8	8	18	18	8
160	61	20	51	9	10	19	21	10
200	74	25	57.5	10	10	25	25	12
250	90	27	68.5	12	10	29	31	15
300/320/350	110	34	79	14	13	33	39	18
400	121.8	38	82.7	13.8	13	37	43	18
500	145	45	95	16	16	45	48	20
630	160	50	108.5	18	18	52	56	23

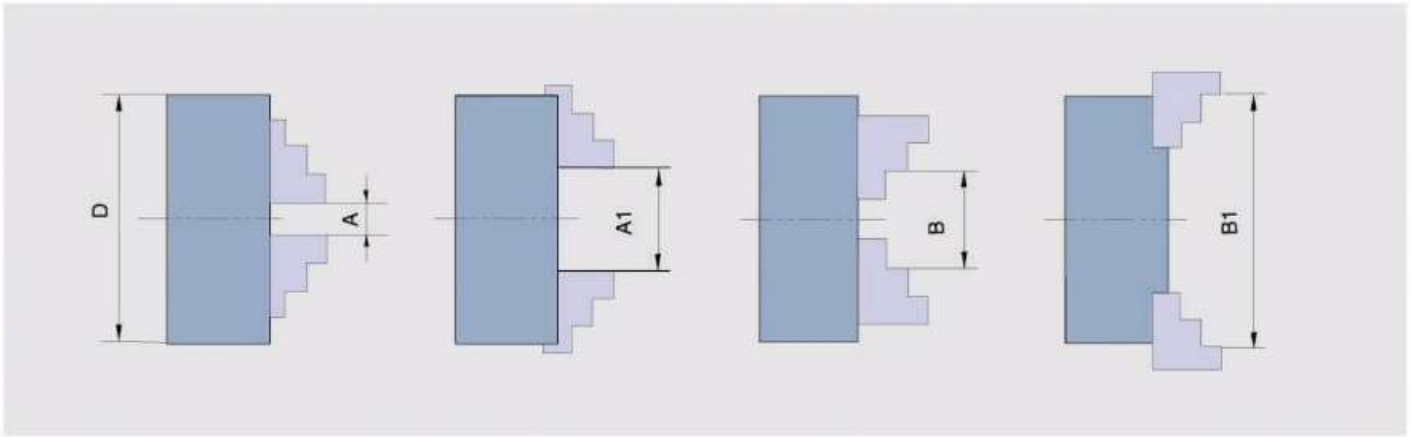

夹持范围
Clamping Range

卡盘规格D Size	正卡爪夹紧范围 Internal jaws clamping range	反卡爪夹紧范围 External jaws clamping range	报价 Unit Price
	A–A1	B–B1	
80	5–35	35–80	
100	6–45	40–100	
125	7–57	48–125	
160	8–80	50–160	
200	10–100	63–200	
250	15–130	80–250	
300	20–156	100–300	
315	20–170	100–315	
320	20–176	100–320	
350	20–206	100–350	
400	25–250	118–400	
450	30–280	120–450	
500	35–300	125–500	
630	50–400	160–630	
800	70–540	200–800	
1000	100–680	250–1000	
1250	145–930	295–1250	
1400	145–1080	295–1400	
1600	160–1280	310–1600	
1800	180–1440	350–1800	
2000	180–1640	350–2000	
2250	180–1890	350–2250	
2500	180–2140	350–2500	
3150	200–2750	380–3150	

三爪手紧卡盘
THREE-JAW MANUAL CHUCKS

SAN OU CHUCK





特征：
1.连接形式有两种：短圆柱连接和螺纹连接。
2.结构紧凑、体积小、操作方便、定心精度高、夹持范围广。
3.主要与仪表机床和木工机械配套，适用于工艺品及有色金属，塑料等非金属的切削加工。
4.钢体。

Features:
1.The chucks have two mounting types: the short cyindrical center mounting and the thread mounting.
2.The compact chucks are small volume,easy to be used and enjoy a high centring preci sion as well as a large clamping range.
3.The chucks are made for meter machine toolsin the processing of non-ferous metals, non-matals like plastics and so on.
4.Steel body.

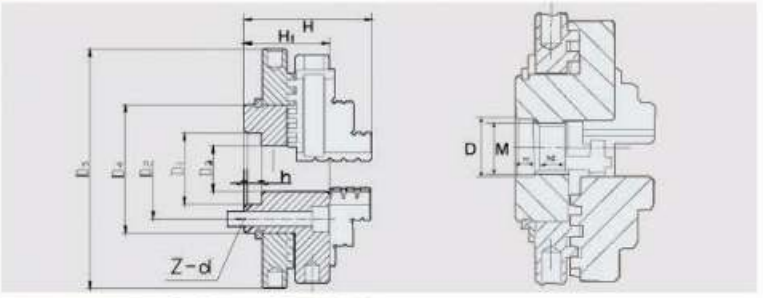



尺寸、性能参数 Dimension characterstic parameters

规格 Size	D	D1	D2	D3	D4	D5	H	H1	h	h1	h2	Z-d	M	夹紧范围 Clamping Range	撑紧范围 Jammping Range	净重 KG N.W.	报价 Unit Price
50	15	–	–	15	30	52	47	33	6	6	12	–	M14×1	1-33	16-50	–	
63	15	22	28	14	36	68	42	28	6	6	12	3-M4	M14×1	1-50	16-50	0.5	
80	16.1	25	35	16	45	84	42	30	6	5	9.5	3-M5	M16×1	1.5-70	20-70	1.5	
100	24.1	32	42	22	52	104	52	36.5	6	5	13.5	3-M6	M24×1.5	2-90	26-90	2	



特征：
1.连接形式有两种：短圆柱连接和螺纹连接。
2.结构紧凑、体积小、操作方便、定心精度高、夹持范围广。
3.主要与仪表机床配套，适用于有色金属及塑料等非金属的切削加工。
4.钢体。

Features:
1.The chucks have two mounting types: the short cyindrical center mounting and the thread mounting.
2.The compact chucks are small volume,easy to be used and enjoy a high centring preci sion as well as a large clamping range.
3.The chucks are made for meter machine toolsin the processing of non-ferous metals, non-matals like plastics and so on.
4.Steel body.

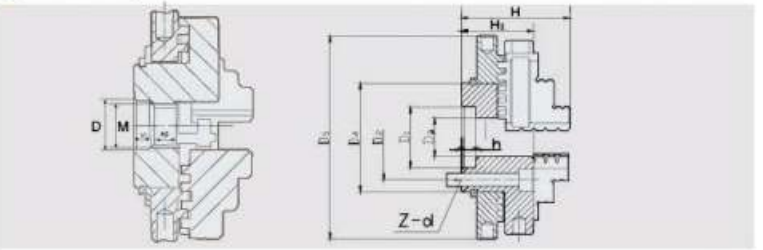

尺寸、性能参数 Dimension characterstic parameters

规格 Size	D	D1	D2	D3	D4	D5	H	H1	h	h1	h2	Z-d	M	夹紧范围 Clamping Range	撑紧范围 Jammping Range	净重 KG N.W.	报价 Unit Price
50	15	–	–	15	30	52	47	33	6	6	12	–	M14×1	1-33	16-50	–	
63	15	22	28	14	36	68	42	28	6	6	12	3-M4	M14×1	1-50	16-50	0.5	
80	16.1	25	35	16	45	84	42	30	6	5	9.5	3-M5	M16×1	1.5-70	20-70	1.5	
100	24.1	32	42	22	52	104	52	36.5	6	5	13.5	3-M6	M24×1.5	2-90	26-90	2	

四爪手紧卡盘
FOUR-JAW MANUAL CHUCKS

SAN OU CHUCK



特征：

- 1.连接形式有两种：短圆柱连接和螺纹连接。
- 2.结构紧凑、体积小、操作方便、定心精度高、夹持范围广。
- 3.主要与仪表机床和木工机械配套，适用于工艺品及有色金属，塑料等非金属的切削加工。
- 4.钢体。

Features:

- 1.The chucks have two mounting types: the short cyindrical center mounting and the thread mounting.
- 2.The compact chucks are small volume,easy to be used and enjoy a high centring preci sion as well as a large clamping range.
- 3.The chucks are made for meter machine toolsin the processing of non-ferous metals, non-matals like plastics and so on.
- 4.Steel body.



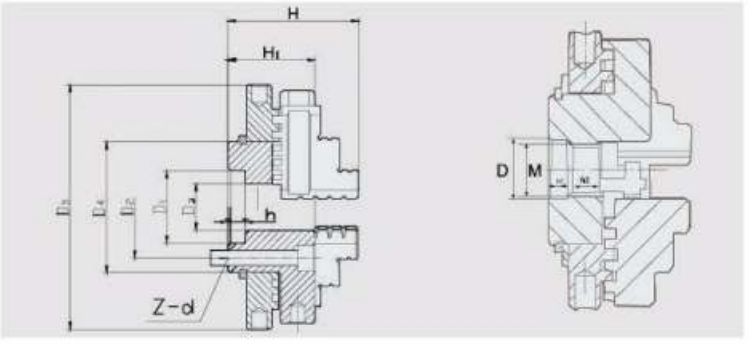



尺寸、性能参数 Dimension characterstic parameters

规格 Size	D	D1	D2	D3	D4	D5	H	H1	h	h1	h2	Z-d	M	夹紧范围 Clamping Range	撑紧范围 Jammping Range	净重 KG N W	报价 Unit Price
50	15	-	-	15	30	52	47	33	6	6	12	-	M14×1	1-33	16-50	-	
63	15	22	28	14	36	68	42	28	6	6	12	3-M4	M14×1	1-50	16-50	0.5	
80	16.1	25	35	16	45	84	42	30	6	5	9.5	3-M5	M16×1	1.5-70	20-70	1.5	
100	24.1	32	42	22	52	104	52	36.5	6	5	13.5	3-M6	M24×1.5	2-90	26-90	2	

K94——四爪木工自定心卡盘

SELF-CENTRING WOOD WORKING CHUCKS

SAN OU CHUCK



适用范围：木材工艺品加工。

特征：

1.易损部件都经过特殊淬火处理，有效地提高耐磨性和使用寿命。

2.较高的自紧定心精度，更大的夹紧力。

Application: Recommended for processing artwork

Features:

1.Flimsy parts are specifically engineered by quenching,for greater durability and extended life.

2.High self-centring precision to the superior gripping force.



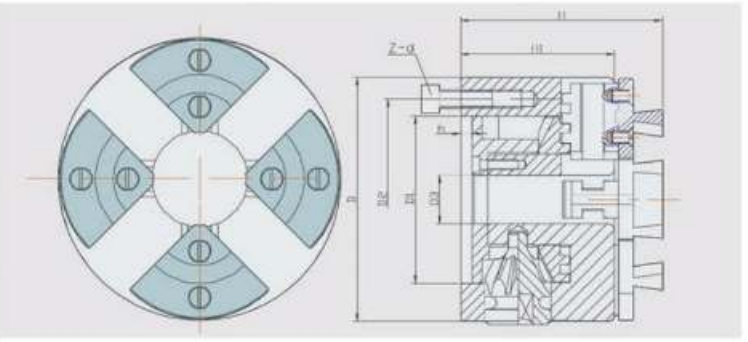



尺寸、性能参数 Dimension characterstic parameters

规格D Size	D1	D2	D3	H	H1	h	z-d	报价 Unit Price
80	55	66	16	66	50	3.5	4-M6	
100	72	84	22	73	53.5	3.5	3-M8	
125	95	108	30	84	58	4	3-M8	
130	100	115	40	86	60	3.5	3-M8	

K94短锥系列其连接尺寸同K11三爪短锥系列。

K94 short taper series have the same mountong dimensions as K11 three-jaw short tape series.

K78重型四爪锻钢单动卡盘

HEAVY FOUR-JAW INOEPENDENT CHUCK (FORGED STEEL)

SAN OU CHUCK



特征：

- 1.单动可调，适用于各种形状工件的加工。
- 2.卸掉卡爪，可单独作花盘使用。
- 3.采用增力丝杆，超大夹紧力。
- 4.广泛用于大型卧车。

Features:

- 1.Independent and adjustable,suitable for processing all kinds of special shaped component.
- 2.Unloading jaws can be used as face plate independently.
- 3.Adapt power force thread bar with super large gripping force.
- 4.It is wide used in large shape horizontal lathes.



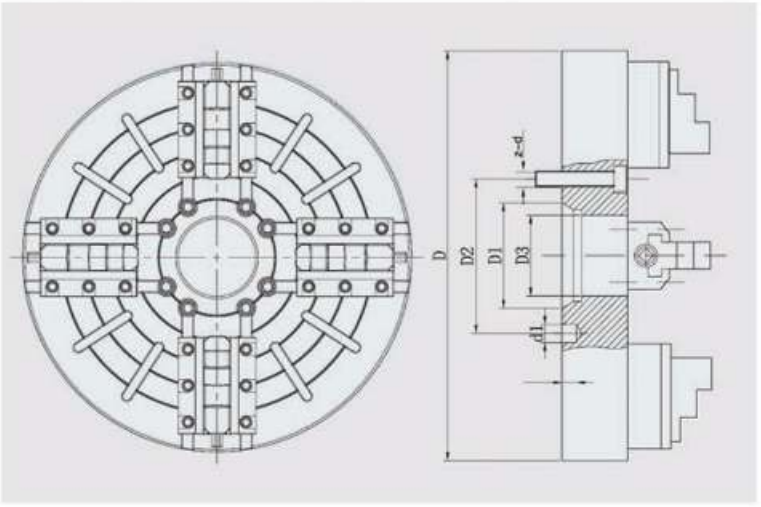

A2型：穿通螺钉连接

尺寸、性能参数 Dimension characterstic parameters

规格D Size	主轴头号 Short-taper No.	D1	D2	D3	H	H1	h	h1	h2	d1	z-d	净重	报价 Unit Price
1000	11	196.869	235	180	355	150	20	16	10	29.4	8-M20	580	
1250	11	196.869	235	180	355	150	20	16	10	29.4	8-M20	830	
1000	15	285.775	330.2	280	355	150	21	17	10	35.7	8-M20	578	
1250	15	285.775	330.2	280	355	150	21	17	20	35.7	8-M20	826	
1400	15	285.775	330.2	280	355	150	21	17	20	35.7	8-M20	1470	
1600	15	285.775	330.2	280	370/380	150/180	21	17	20	35.7	8-M20	1920	
2000	15	285.775	330.2	280	380	175	21	17	20	35.7	8-M24	2810	
1000	20	412.775	463.6	305	355	150	23	19	10	42.1	8-M24	575	
1250	20	412.775	463.6	305	355	150	23	19	10	42.1	8-M24	820	
1400	20	412.775	463.6	305	355	150	23	19	10	42.1	8-M24	1460	
1600	20	412.775	463.6	305	370/380	150/180	23	19	10	42.1	8-M24	1900	

K73强力四爪单动锻钢卡盘

K73 POWERFULL FOUR-JAW INDEPENDENT CHUCK(FORGED STEEL)

SAN OU CHUCK



特征：

- 1.单动可调，适用各种形状工件的加工。
- 2.采用增力丝杠，超大夹紧力。
- 3.锻钢盘体，适用于较高转速。
- 4.配合力矩扳手可实现夹紧力的定量调节。
- 5.卡盘高加持力，可以提高机床的整体加工精度，提高工作效率。
- 6.广泛用于大型卧车。

Features：

- 1.adjustable independently,suitable for machining various shapes of workpiece.
- 2.adopt increased force screw, strong clamping force.
- 3.forged steel body, suitable for higher speed.
- 4.with torque wrench, quantitative adjustment of clamping force is achievable.
- 5.the high capacity of the chuck can improve the overall machining accuracy of the machine tool and the work efficiency
- 6.widely used in large-sized sleeping cars.



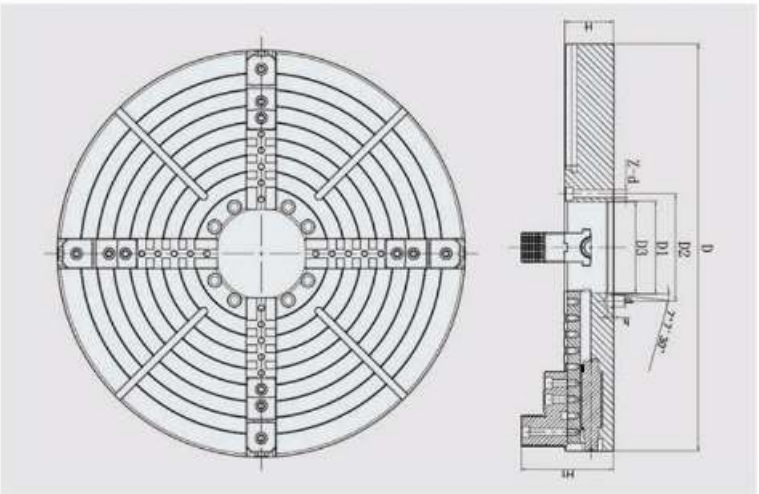

增力丝杠
increased force screw



尺寸、性能参数 Dimension characterstic parameters

规格D Size	主轴头号 Short-taper No.	D1	D2	D3	H	H1	d	h	z-d	最大输入扭矩 maximum input torque	最大夹紧力maximum clamping force 外夹 outer clip	内夹 inner clip	报价 Unit Price
1250	15	285.78	330.2	280	150	283	35.7	20	8-M24	80	150	100	
1400	15	285.78	330.2	280	150	283	35.7	20	8-M24	80	150	100	
1600	15	285.78	330.2	280	150	283	35.7	20	8-M24	80	150	100	
1800	15	285.78	330.2	230	195	328	35	12	8-M24	80	150	100	

承接非标卡盘，欢迎致电垂询！
Undertake non-standard chuck,welcome to call us!

K73四爪单动锻钢卡盘

K73 FOUR-JAW INDEPENDENT CHUCK(FORGED STEEL)

SAN OU CHUCK



特征：

- 1.单动可调，适用各种形状工件的加工。
- 2.锻钢盘体，适用于较高转速。
- 3.卡爪形式为分离爪，方便正夹或反夹。
- 4.采用梯形螺纹丝杠，提高夹紧力。

Features:

- 1.adjustable independently,suitable for machining various shapes of workpiece.
- 2.forged steel body, suitable for higher speed.
- 3.independent jaws make it easy for clamping and reverse clamping.
- 4.adopt trapezoidal thread screw to increase clamping force.



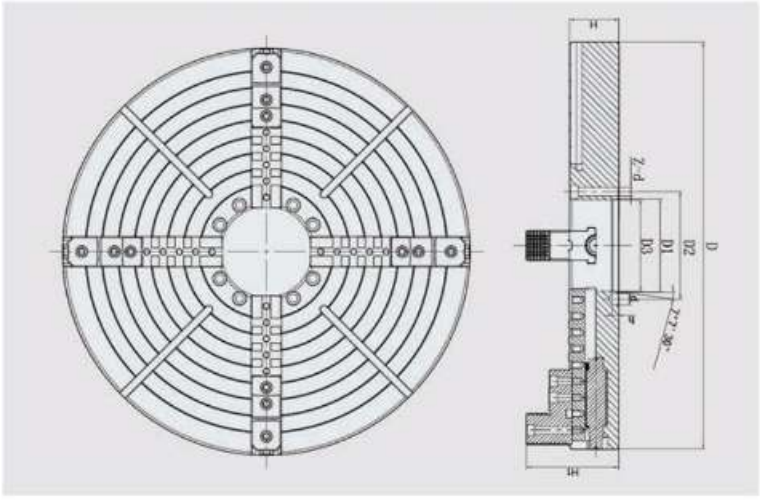

TR螺纹丝杠
TR thread screw



尺寸、性能参数 Dimension characterstic parameters

规格D Size	主轴头号 Short-taper No.	D1	D2	D3	H	H1	d	h	z-d	净重	报价 Unit Price
800	20	412.78	463.6	360	140	254	42.1	20	8-M24		
1000	11	196.87	235	182	140	254	29.4	10	4-M20		
1000	15	285.78	330.2	280	140	254	35.7	10	8-M24		
1000	20	412.78	463.6	360	140	254	42.1	20	8-M24		
1250	15	285.78	330.2	280	150	283	35.7	20	8-M24		
1400	15	285.78	330.2	280	150	283	35.7	20	8-M24		
1400	20	412.78	463.6	360	150	283	42.1	20	8-M24		
1600	15	285.78	330.2	280	150	283	35.7	20	8-M24		

承接非标卡盘，欢迎致电垂询！
Undertake non-standard chuck,welcome to call us!

弹簧夹头卡盘
COLLET CHUCKS

SAN OU CHUCK



特征：

- 1.精度≤0.05mm。
- 2.钢盘体，手动夹紧，夹持可靠。
- 3.短圆柱连接形式，可配短锥连接盘。
- 4.高转速，高精度，大夹紧力。
- 5.夹紧夹头（圆孔、四方孔、六方孔），符合DNI6341标准，更换方便。

Features:

- 1.Precision<0.05mm.
- 2.Steel chuck body,manual clamping,clamping reliable.
- 3.Short cylindrical center mounting,can be match with short-taper connection plate.
- 4.High speed,high precision,big clamping force.
- 5.Chuck(circular hole,square hole,hexagonal hole)meet DNI6341 standard, convenience for change.





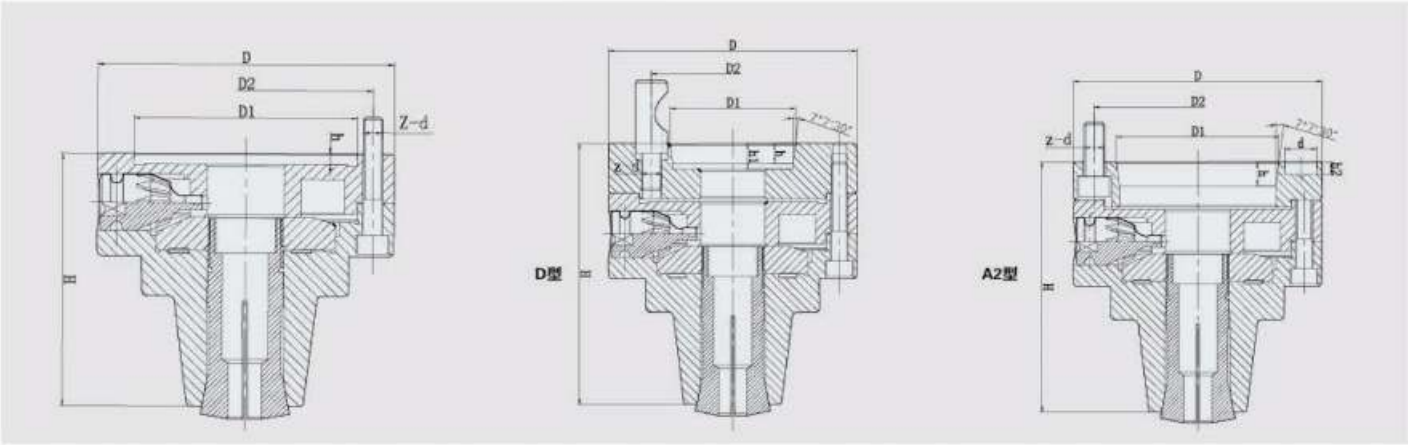

尺寸、性能参数 Dimension characterstic parameters

规格 Size	D	D1	D2	H	h	h1	h2	d1	Z-M	报价 Unit Price
JK125/D4-5C	126	63.513	82.6	132.5	10	13	-	-	3-M10×1	
JK125/D5-5C	146	82.563	104.8	137.5	12	15	-	-	6-M12×1	
JK125/D6-5C	182	106.38	133.4	152.5	13	16	-	-	6-M16×1.5	
JK125/D8-5C	225	139.72	171.4	145.5	14	18	-	-	6-M20×1.5	
JK125/A25-5C	126	82.563	104.8	127	12	-	6.5	16.3	6-M10	

尺寸、性能参数 Dimension characterstic parameters

规格 Size	D	D1	D2	H	h	Z-D	报价 Unit Price
JK125-5C	126	95	108	107.5	4	3-M8	
JK160-16C	160	125	140	142	4	3-M10	



特征：

- 1.连接形式有两种：短圆柱连接和螺纹连接。
- 2.结构紧凑、体积小、操作方便、定心精度高、夹持范围广。
- 3.主要与仪表机床配套，适用于有色金属及塑料等非金属的切削加工。

Features:

- 1.The chucks have two mounting types: the short cyindrical center mounting and the thread mounting.
- 2.The compact chucks are small volume,easy to be used and enjoy a high centring preci sion as well as a large clamping range.
- 3.The chucks are made for meter machine toolsin the processing of non-ferous metals,non-matals like plastics and so on.



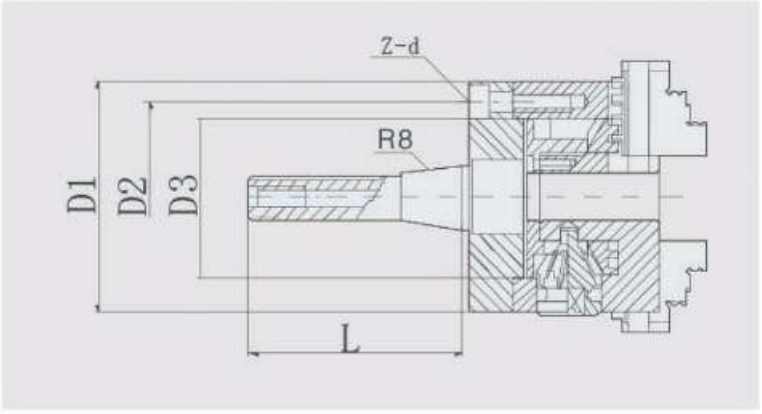



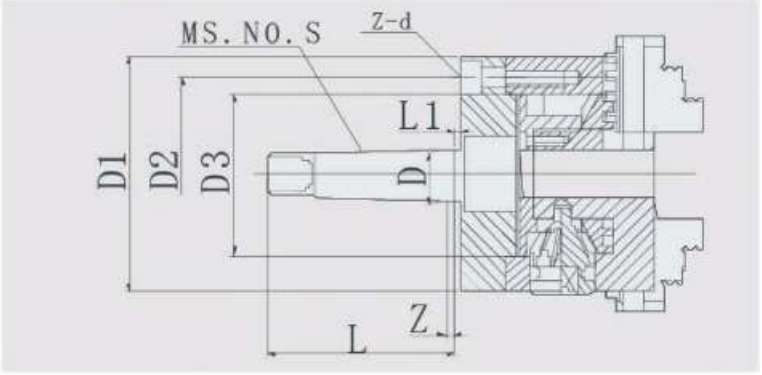

尺寸、性能参数 Dimension characterstic parameters

规格 Size	D	D1	D2	D3	L +IT10/2	Z±0.05	L1	z-d
MS1-3"	12.065	80	66	55	53.5	1	3.5	3-M6
MS2-3"	17.780	80	66	55	64	1	5	3-M6
MS3-3"	23.825	80	66	55	81	1	5	3-M6
MS4-3"	31.267	80	66	55	102.5	1.5	6.5	3-M6
MS5-3"	44.399	80	66	55	129.5	1.5	6.5	3-M6
MS1-4"	12.065	100	84	72	53.5	1	3.5	3-M8
MS2-4"	17.780	100	84	72	64	1	5	3-M8
MS3-4"	23.825	100	84	72	81	1	5	3-M8
MS4-4"	31.267	100	84	72	102.5	1.5	6.5	3-M8
MS5-4"	44.399	100	84	72	129.5	1.5	6.5	3-M8
MS3-5"	23.825	125	108	95	81	1.5	5	3-M8
MS4-6"	31.267	125	108	95	102.5	1.5	6.5	3-M8
MS5-6"	44.399	160	142	130	129.5	1.5	6.5	3-M8
MS5-8"	44.399	200	180	165	129.5	1.5	6.5	3-M10
MS5-10"	44.399	250	226	206	129.5	1.5	6.5	3-M12
R8-KB11 3"	/	80	66	55	126	/	/	3-M6
R8-KB11 4"	/	100	84	72	126	/	/	3-M8

三爪自定心锥柄卡盘

THREE-JAW SELF-CENTRING CHUCKS MITH MT SHANK

SAN OU CHUCK



适用范围：重型便携式台钻或高精密度机床。

1.莫氏锥柄连接，更换快速，方便操作。

Application: Heavy-Duty portable bench or high precision CNC machines

1.MORSE TAPER MOUNT,change quickly and convenient in operation





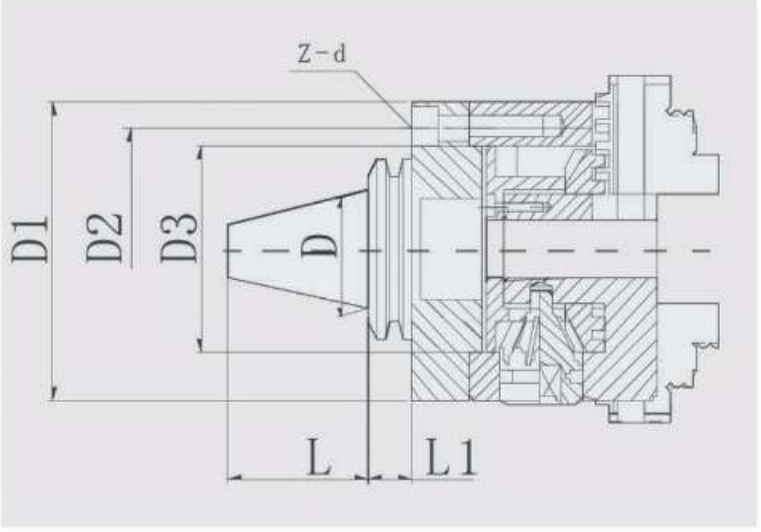

尺寸、性能参数 Dimension characterstic parameters

规格 Size	D	D1	D2	D3	L	L1	z-d	报价 Unit Pr
7:24-30-3"	31.750	80	66	55	48.4	10	3-M6	
7:24-40-3"	44.450	80	66	55	65.4	10	3-M6	
7:24-30-4"	31.750	100	84	72	48.4	10	3-M8	
7:24-40-4"	44.450	100	84	72	65.4	10	3-M8	
7:24-45-4"	57.150	100	84	72	82.8	10	3-M8	
7:24-30-5"	31.750	125	108	95	48.4	10	3-M8	
7:24-40-5"	44.450	125	108	95	65.4	10	3-M8	
7:24-45-5"	57.150	125	108	95	82.8	10	3-M8	
7:24-40-6"	44.450	160	142	130	65.4	10	3-M8	
7:24-45-6"	57.150	160	142	130	82.8	10	3-M8	
7:24-40-8"	44.450	200	180	165	65.4	10	3-M10	
7:24-45-8"	57.150	200	180	165	82.8	10	3-M10	
7:24-40-10"	44.450	250	226	206	65.4	10	3-M12	
7:24-45-10"	57.150	250	226	206	82.8	10	3-M12	

三爪自定心卡盘
THREE-JAW SELF-CENTRING CHUCKS



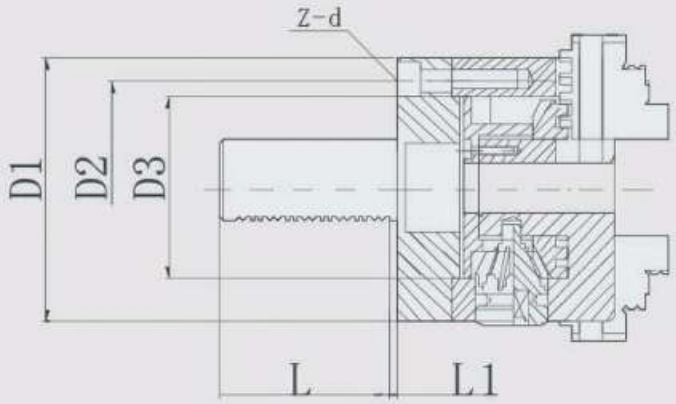

旋转锥柄卡盘
POTAING CHUCKS MITH MT SHANK



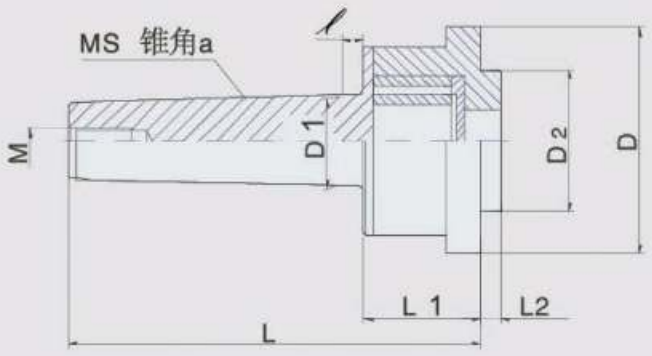

三爪自定心卡盘
THREE-JAW SELF-CENTRING CHUCKS

尺寸、性能参数 Dimension characterstic parameters

规格 Size	D1	D2	D3	Z-d	L1	报价 Unit Price
RK-KB11 3"	80	66	55	3-M6	3.5	
RK-KB11 4"	100	84	72	3-M8	5	
RK-KB11 5"	125	108	95	3-M8	5	
RK-KB11 6"	160	142	130	3-M8	5	
RK-KB11 8"	200	180	165	3-M10	5	
RK KB11 10"	250	226	206	3-M12	5	

旋转锥柄卡盘
POTAING CHUCKS MITH MT SHANK

尺寸、性能参数 Dimension characterstic parameters

规格 Size		D1	L	L1	L2	/	M	RPM max.	范围		报价 Unit Price
MS2	80	17.780	177.5	97.5	44	3.5	1/2"-13	4000	min.	max.	
MS3	80	23.825	-	-	44	5	1/2"-13	4000	2	71	
MS3	100	23.825	205.5	106.4	51	5	1/2"-13	3500	-	-	
MS4	100	31.267	-	-	51	6.5	5/8"-11	3500	3	93	
MS4	125	31.267	244.6	121.4	51	6.5	5/8"-11	3200	-	-	
MS5	125	44.399	289.5	132	56	6.5	5/8"-11	3200	3	125	
MS5	160	44.399	299	133	65	6.5	5/8"-11	3000	3	160	
MS5	200	44.399	299	133	65	6.6	5/8"-11	2500	4-200		
MS5	250	44.399	299	133	65	6.5	5/8"-11	2000	6-250		

五爪自定心卡盘
FIVE-JAW SELF-CENTRING LATHE CHUCK

SAN OU CHUCK



特征:

- 1.短圆柱连接形式。
- 2.适合夹持五等分的工件。
- 3.根据客户需要配带特殊卡爪。

Features:

- 1. Short cylindrical center mounting.
- 2. Suitable for clamping pentagonal workpieces.
- 3. Special jaws under customer's requirements.





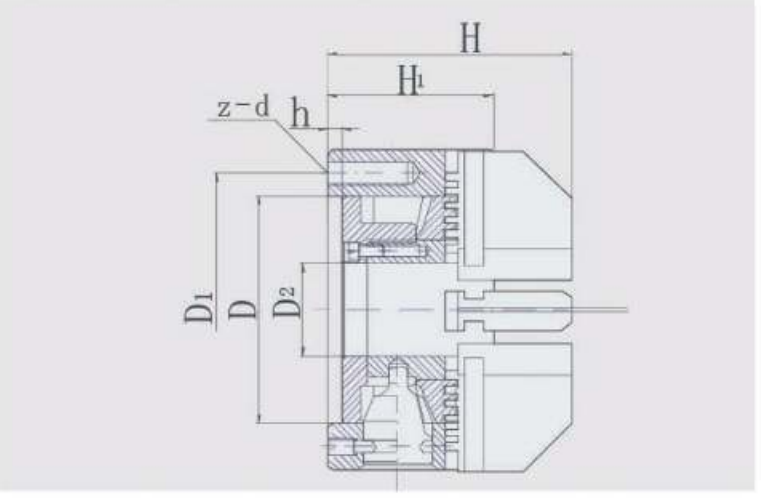

尺寸、性能参数 Dimension characterstic parameters

规格 Size	D	D1	D2	H	H1	h	z-d	最大输入扭矩 Max. Input Torsion	极限转速 Max. Speed	报价 Unit Price
160	130	142	40	95	65	5	5-M8	160	2500	
200	165	180	65	100	75	5	5-M10	250	2000	
250	206	226	80	120	80	5	5-M12	320	1600	
315	260	226	100	147	90	6	5-M16	400	1200	
320	270	285	100	152.5	95	11	5-M16	400	1200	
325	272	290	100	153.5	96	12	5-M16	400	1200	
400	340	368	145	-	101	6	5-M16	500	1000	
500	440	465	210	-	115	6	5-M16	630	800	

K62四爪复合卡盘

K62 FOUR-JAW COMPOUND CHUCK

SAN OU CHUCK



特征:

- 1.短圆柱连接形式
- 2.四爪既可自定心，也可单独调整中心，复合功能精度高
- 3.适用于各种异形、偏心零件的加工

Features:

- 1.Short cylindrical center mounting.
- 2.The jaws can centre by themselves and also can be adjusted independently to center with high combination accuracy.
- 3.Suitable for processing special shaped and eccentric components.





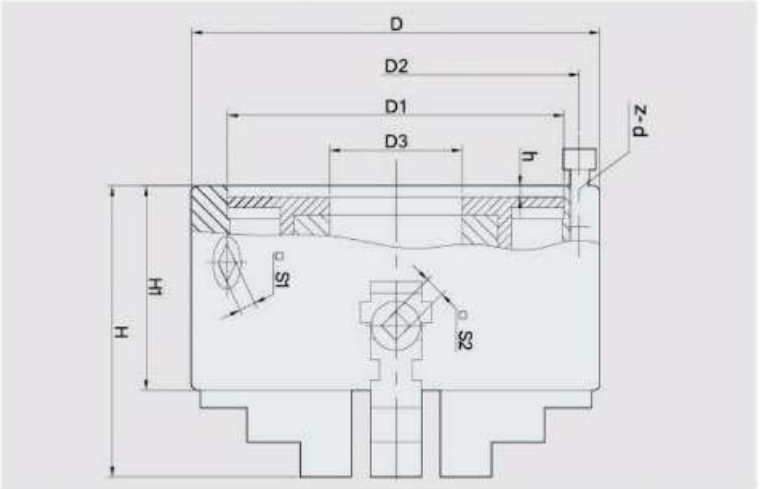

尺寸、性能参数 Dimension characterstic parameters

规格 Size D	D1	D2	D3	H1	H	h	S1	S2	z-d	净重	报价 Unit Price
160	130	142	42	87	115	5	10	8	3-M8	11	
200	165	180	65	97	127	5	12	10	3-M10	18	
250	206	226	80	102	142	5	12	10	3-M12	29	
325	272	296	100	120	163	6	13	12	3-M16	46	
500	440	465	210	147	202.3	6	17	14	6-M16	-	

强力超薄型卡盘
THREE-JAWS MILLING CHUCKS

SAN OU CHUCK



特征:

1.操作性提升：由于扳手的插入角度为30度，故在桌子上进行的工作会非常大而方便。
2.盘身非常的轻薄盘体的轻薄，可以使以往由于高度太厚而造成无法操作的工作变得可以操作。另外，针对轻薄的盘体进行的工作可以降低重心，故重心位置下移后，操作变得更加稳定安全。
3.安装方法更简便：利用新增的盘体U形凹槽，桌子的夹槽，最后使用T型螺丝和螺帽就可以简单地固定。
4.防灰尘构造：
利用盘体的卷形咬合处的特殊结构（滑脱片），当防止粉尘的进入后造成的灼烧部的消失，供油部可以持续

Features:

1.Operational improvement：Since the wrench insertion angle is 30 degrees, the work on the table is very large and convenient.
2.The body is very thin and light：The lightness and thinness of the disc makes it possible to operate work that was previously too thick to operate. In addition, the work on the thin disc can reduce the center of gravity, so the operation becomes more stable and safe after the center of gravity moves down.
3.The installation method is simpler：Using the new disk body u-shaped grooves, table clamps, and finally using the Tscrews and nuts can be easily fixed.
4.Dust-proof structure：By using the special structure of the coil bite (slip plate) of the disc body, the oil
supply part can be sustained when the burning part disappears after preventing dust from entering.

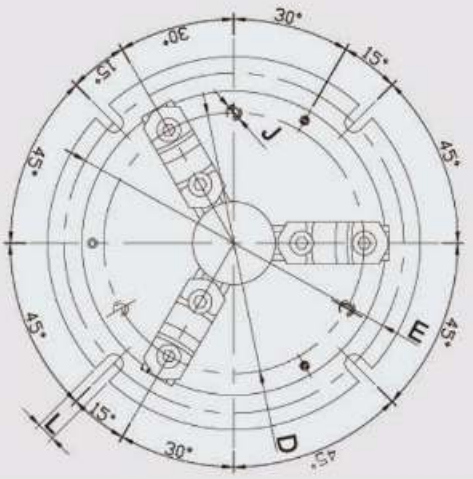

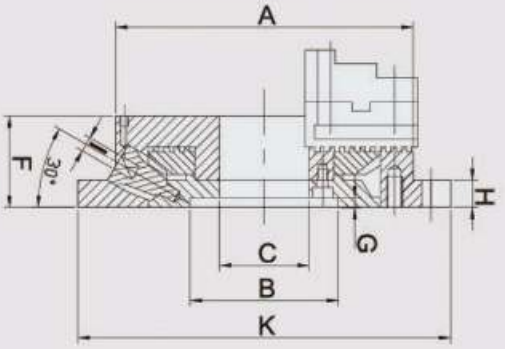

尺寸、性能参数 Dimension characterstic parameters

规格 Size A	B	C	D	E	F	G	H	I	J	K	L	报价 Unit Price
170	130	45	147	194	58	6	18	10	3-M10	220	13	
210	155	60	172	240	65	6	20	12	3-M10	270	13	
255	190	80	210	286	73	6	20	12	3-M12	315	16	
305	250	105	285	340	80	5	22	13	3-M12	370	18	

KF12四爪方形卡盘

KF12 FOUR-JAW SQUARE CHUCK

SAN OU CHUCK



特征:

- 1.适合于铣床、钻床、加工中心等机床
- 2.可同时安装多台，实现多工位加工，提高加工效率

Features:

- 1.Suitable for milling ,drilling and machining centre machine-tool etc.
- 2.Can mount several chucks so as to fulfill multi-step process can increase the machining efficiency.

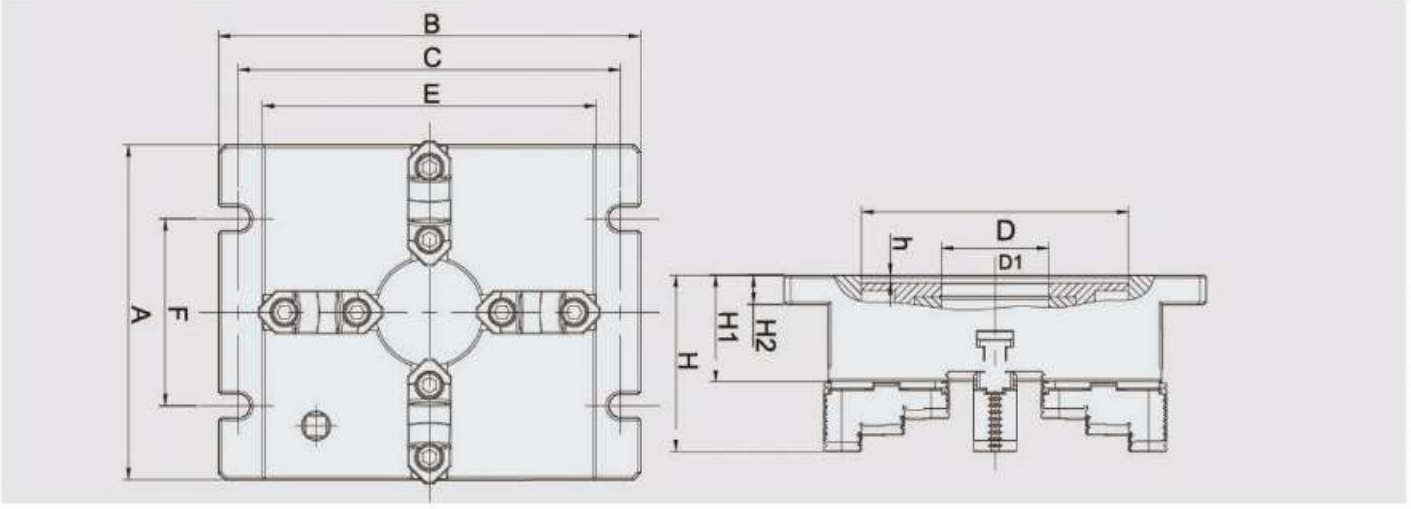

尺寸、性能参数 Dimension characterstic parameters

规格 Size D	A	B	C	D1	D2	E	F	G	H1	H	M	h	报价 Unit Price
165A	215	165	165	130	40	144	144	18	57	96	4-M10	5.5	
200A	250	200	200	160	55	174	174	20	65	108	4-M12	6	
250A	310	250	250	200	70	218	218	22	72	122	4-M14	6	
310A	380	310	310	260	100	274	274	25	85	141	4-M16	7	

卡盘扳手
LATHE CHUCK WRENCH

SAN OU CHUCK



K72扳手

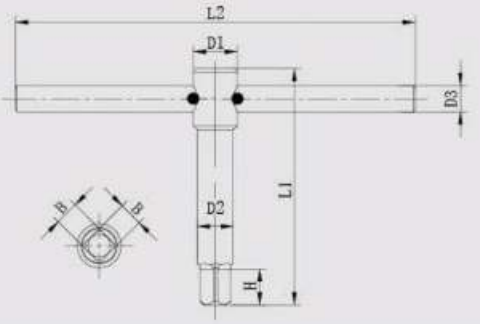

规格 Size D	D1	D2	L1	H	B	D3	L2
80	15	10	70	12	6	8	125
100	15	10	70	12	6	8	125
125	17	13	80	12	7	8	125
160	20	16	100	18	10	10	160
200	24	19	120	18	10	13	200
250	24	20	120	18	12	13	250
300	30	22	120	18	14	16	300
320	30	22	152	18	14	16	300
350	30	22	152	18	14	16	300
400	30	22	152	18	14	16	300
450	30	22	152	18	14	16	300
500	36	28	200	27	14	20	500
630	36	30	220	27	17	20	500
800	44	36	260	30	19	20	500
1000	44	36	260	30	22	20	500
1250	44	36	260	30	22	20	500



K11/K12扳手

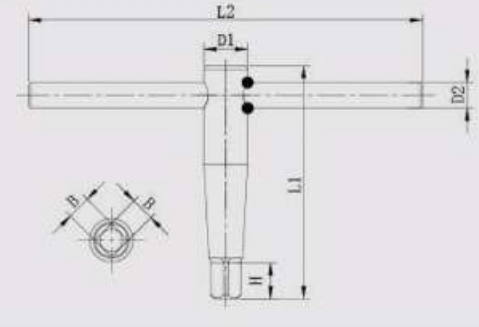

规格 Size D	D1	D2	L1	H	B	L2
80	15	8	64	12	8	125
100	15	8	64	12	8	125
125	18.5	10	75	13	10	140
130	18.5	10	75	13	10	140
160	20	10	90	15	10	160
165	20	10	90	18	12	160
200	24	13	120	18	12	200
250	24	13	120	18	12	250
315	28	14	120	18	13	300
320	28	14	120	18	13	300
325	28	14	120	18	13	300
380	28	16	150	18	14	300
400	28	16	150	18	14	300
500	30	16	160	20	17	300
630	35	20	200	23	19	500
800	35	20	200	23	19	500


法兰盘 ADAPTER PLATES


法兰盘 ADAPTER PLATES


法兰盘 ADAPTER PLATES


法兰盘 ADAPTER PLATES

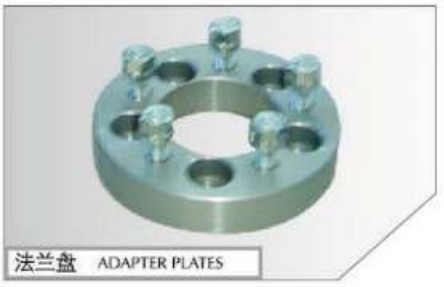
法兰盘 ADAPTER PLATES


法兰盘 ADAPTER PLATES


法兰盘 ADAPTER PLATES


法兰盘 ADAPTER PLATES


法兰盘 ADAPTER PLATES


法兰盘 ADAPTER PLATES

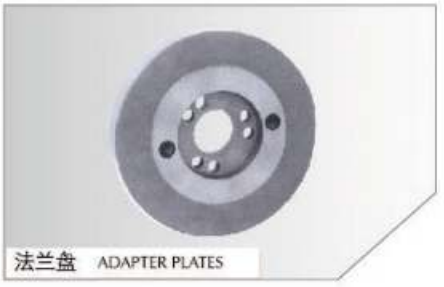
法兰盘 ADAPTER PLATES


法兰盘 ADAPTER PLATES


法兰盘 ADAPTER PLATES


法兰盘 ADAPTER PLATES


法兰盘 ADAPTER PLATES


法兰盘 ADAPTER PLATES


法兰盘 ADAPTER PLATES


法兰盘 ADAPTER PLATES

扳手钻夹头 中型
KEY TYPE CHUCK MEDIUM DUTY

KS系列
KS SERIES

SAN OU CHUCK



STYLE A　　STYLE B



适用范围：轻型、中型、重型便携式台钻或基钻连接电动工具。

特征：

- 1.高精密螺纹和圆锥孔紧密地连接在工具上。
- 2.外壳，锁孔，钥匙经过淬火。
- 3.夹爪特殊处理，具有良好耐磨性。
- 4.外壳齿轮和钥匙齿轮冷压成型。
- 5.精度准确可靠，持久耐用。

Application: Recommended for Light, Medium and Heavy-Duty portable bench or floor mounted power tools.

Features:

- 1.High precision threaded and tapered tightly mounts on the tools.
- 2.Sleeve, key hole and key are shaped by quenching.
- 3.Jaws are specifically engineered for tight tolerance production drilling.
- 4.Sleeve teeth and key holesare are shaped by cold pressing.
- 5.Super precision and durable.



外壳冷挤压 cold pressing

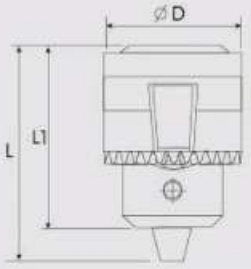

THREAD MOUNT: UNF、METRIC

工厂编号 Art.No	型 号 Model	夹持范围 mm	Capacity Inch	连接尺寸 Mount	D mm	L1 mm	L mm	精度 Precision
202000	J3106H	0.6-6	1/64-1/4	3/8-24UNF	30.3	41.7	50.5	0.18
203000	J3110M	1.0-10	1/32-3/8	3/8-24UNF	37	51	60.5	0.25
203100	J3110M	1.0-10	1/32-3/8	1/2-20UNF	37	51	60.5	0.25
204000	J3113M	1.0-13	1/32-1/2	3/8-24UNF	46	64	78	0.25
205000	J3113H	1.0-13	1/32-1/2	5/8-16UN	53	69.5	87	0.18
206200	J3116H	1.0-16	1/32-5/8	5/8-16UN	57	77.5	95	0.18

MORSE TAPER MOUNT

工厂编号 Art No	型 号 Model	夹持范围 mm	Capacity Inch	连接尺寸 Mount	D mm	L1 mm	L mm	精度 Precision
242000	J2106H	0.6-6	1/64-1/4	B10	30.3	40	49	0.18
243100	J2310M	1.0-10	1/32-3/8	B12	37	51	60	0.25
244200	J2313M	1.0-13	1/32-1/2	B16	46±0.5	64	79	0.25
245300	J2113H	1.0-13	1/32-1/2	B16	53	69.5	87	0.18
246300	J2116H	1.0-16	1/32-5/8	B18	53	74	93	0.18

JACQUARD TAPER MOUNT

工厂编号 Art No	型 号 Model	夹持范围 mm	Capacity Inch	连接尺寸 Mount	D mm	L1 mm	L mm	精度 Precision
282100	J2106H	0.6-6	1/64-1/4	JT1	30.3	41.7	50.5	0.18
284400	J2110M	1.0-10	1/32-3/8	JT33	37	51	60.5	0.25
284700	J2113M	1.0-13	1/32-1/2	JT6	46	64	78	0.25
286400	J2116H	1.0-16	1/32-5/8	JT33	57	77.5	95	0.18
287500	J2119H	1.0-19	1/32-3/4	JT4	68	97	120	0.18
287600	J2113H	1.0-13	1/32-1/2	JT6	53	69.5	87	0.18

扳手钻夹头　中型
KEY TYPE CHUCK MEDIUM DUTY

TT 精密系列
TT SERIES

SAN OU CHUCK



适用范围：轻型，中型，重型便捷式台钻或基钻连接气动工具。

特征：

- 1.高精密螺纹和圆锥孔紧密地连接在工具上。
- 2.外壳，锁孔，钥匙经过淬火。
- 3.夹爪特殊处理，具有良好耐磨性。
- 4.外壳齿轮和钥匙齿轮冷压成型。
- 5.精度准确可靠，持久耐用。

Application:Recommended for Light, Medium and Heavy-Duty portable bench or floor mounted power tools.

Features:

- 1.High precision threaded and tapered tightly mounts on the tools.
- 2.Sleeve,key, hole and key are shaped by quenching.
- 3.Jaws are specifically engineered for tight tolerance production drilling.
- 4.Sleeve teeth and key holesare are shaped by cold pressing.
- 5.Super precision and durable.



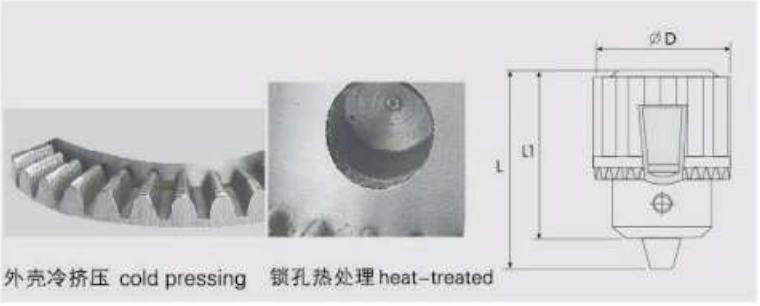

外壳冷挤压 cold pressing　锁孔热处理heat-treated

THREAD MOUNT: UNF、METRIC

工厂编号 Art.No	型 号 Model	夹持范围 mm	Capacity Inch	连接尺寸 Mount	D mm	L1 mm	L mm	精度 Precision
202001	J3106H	0.6-6	1/64-1/4	3/8-24UNF	30.3	41.7	50.5	0.25
203001	J3110M	1.0-10	1/32-3/8	3/8-24UNF	37	51	60.5	0.25
203101	J3110M	1.0-10	1/32-3/8	1/2-20UNF	37	51	60.5	0.25
204001	J3113M	1.0-13	1/32-1/2	3/8-24UNF	46	64	78	0.25
205101	J3113M	1.0-13	1/32-1/2	1/2-20UNF	46	64	78	0.25
204201	J3113M	1.0-13	1/32-1/2	5/8-16UNF	45.5	62	78	0.25
206201	J3116M	1.0-16	1/32-5/8	5/8-16UNF	57	77.5	95	0.25

MORSE TAPER MOUNT

工厂编号 Art No	型 号 Model	夹持范围 mm	Capacity Inch	连接尺寸 Mount	D mm	L1 mm	L mm	精度 Precision
242001	J2106H	0.6-6	1/64-1/4	B10	30.3	41.7	50.5	0.18
243101	J2110M	1.0-10	1/32-3/8	B12	37	51	60	0.25
244201	J2113M	1.0-13	1/32-1/2	B16	46	64	78	0.25
245301	J2316H	1.0-16	1/32-5/8	B18	57	77.5	95	0.18

JACQUARD TAPER MOUNT

工厂编号 Art No	型 号 Model	夹持范围 mm	Capacity Inch	连接尺寸 Mount	D mm	L1 mm	L mm	精度 Precision
282101	J2106H	0.6-6	1/64-1/4	JT10	30.3	41.7	50.5	0.18
283401	J2110M	1.0-10	1/32-3/8	JT33	37	51	60	0.25
284701	J2113M	1.0-13	1/32-1/2	JT6	46	64	78	0.25
286401	J2116H	1.0-16	1/32-5/8	JT33	57	77.5	95	0.18
287501	J2119H	1.0-19	1/32-3/4	JT4	68	97	120	0.18

扳手钻夹头
KEY TYPE CHUCK

SAN OU CHUCK



适用范围：适用于高速电磨、雕刻机、精密机床。

Application：Suitable for super electric grinderl、engraving machine、and precision machine lathe.





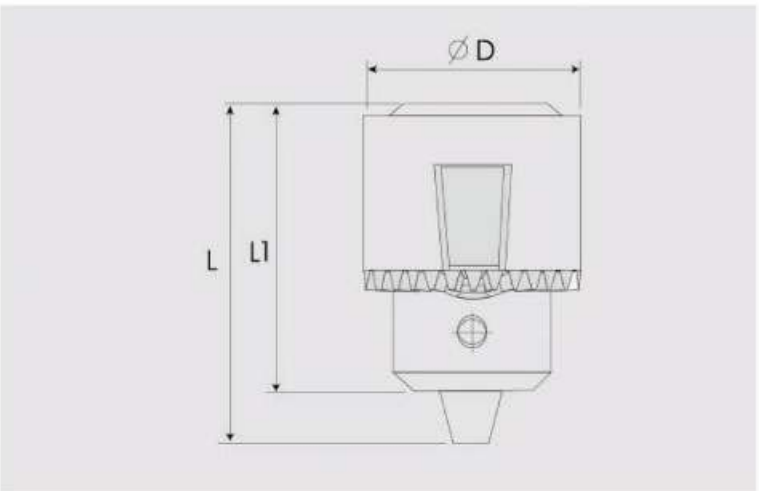

工厂编号 Art.No	型 号 Model	夹持范围 mm	Capacity Inch	连接尺寸 Mount	D mm	L1 mm	L mm	精度 Precision
442009	J2106H	0.4–6	1/64–1/4	B10	30	41.7	50.5	0.18
481009	JM2104H	0.3–4	1/88–1/6	JT0	22	30	36	0.18

扳手钻夹头　重型　JJ系列
KEY TYPE CHUCK HEAVY DUTY　JJ SERIES

SAN OU CHUCK



适用范围：轻型、中型、重型便携式台钻或基钻连接电动工具。

特征：

- 1.高精密螺纹和圆锥孔紧密地连接在工具上。
- 2.外壳，锁孔，钥匙经过淬火。
- 3.夹爪特殊处理，具有良好耐磨性。
- 4.外壳齿轮和钥匙齿轮冷压成型。
- 5.精度准确可靠，持久耐用。

Application: Recommended for Light, Medium and Heavy-Duty portable bench or floor mounted power tools.

Features:

- 1.High precision threaded and tapered tightly mounts on the tools.
- 2.Sleeve, key hole and key are shaped by quenching.
- 3.Jaws are specifically engineered for tight tolerance production drilling.
- 4.Sleeve teeth and key holesare are shaped by cold pressing.
- 5.Super precision and durable.



特殊要求
Special Requirement



外壳冷挤压 cold pressing　锁孔热处理 heat-treated

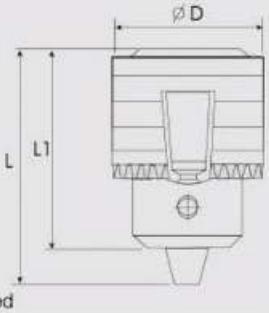

THREAD MOUNT: UNF、METRIC

工厂编号 Art No	型 号 Model	夹持范围 mm	Capacity Inch	连接尺寸 Mount	D mm	L1 mm	L mm	精度 Precision
303004	J3110H	1.0-10	1/32-3/8	3/8-24UNF	43	53	69	0.25
303104	J3110H	1.0-10	1/32-3/8	1/2-20UNF	43	53	69	0.25
304104	J3113H	1.0-13	1/32-1/2	1/2-20UNF	53	69.5	87	0.25

MORSE TAPER MOUNT

工厂编号 Art.No	型 号 Model	夹持范围 mm	Capacity Inch	连接尺寸 Mount	D mm	L1 mm	L mm	精度 Precision
343104	J2110H	1.0-10	1/32-3/8	B12	43	53	69	0.18
344204	J2113H	1.0-13	1/32-1/2	B16	53	69.5	87	0.18
345204	J2116M	3.0-16	1/8-5/8	B16	53	69.5	87	0.25
345304	J2116M	3.0-16	1/8-5/8	B18	53	69.5	87	0.25
346204	J2116H	1.0-16	1/32-5/8	B16	57	77.5	95	0.18
346304	J2116H	1.0-16	1/32-5/8	B18	57	77.5	95	0.18
348404	J2120H	5.0-20	3/16-3/4	B22	65	84	106	0.18
343154	J2106H	0.6-6	1/32-1/4	B10	31	41.7	50	0.18

JACQUARD TAPER MOUNT

工厂编号 Art No	型 号 Model	夹持范围 mm	Capacity Inch	连接尺寸 Mount	D mm	L1 mm	L mm	精度 Precision
383204	J2110H	1.0-10	1/32-3/8	JT2	43	53	69	0.18
384404	J2113H	1.0-13	1/32-1/2	JT33	53	69.5	87	0.18
384704	J2113H	1.0-13	1/32-1/2	JT6	53	69.5	87	0.18
385304	J2116M	3.0-16	1/8-5/8	JT3	53	67.5	87	0.25
385404	J2116M	3.0-16	1/8-5/8	JT33	53	69.5	87	0.25
385704	J2116M	3.0-16	1/8-5/8	JT6	53	69.5	87	0.25
386304	J2116H	1.0-16	1/32-5/8	JT3	57	77.5	95	0.18
388304	J2120H	5.0-20	3/16-3/4	JT3	65	84	106	0.18
383254	J2106H	0.6-6	1/32-1/4	JT1	31	41.7	50	0.18

扳手钻夹头　重型
KEY TYPE CHUCK HEAVY DUTY

ZW精密系列
ZW SERIES

SAN OU CHUCK



適用范围：轻型、中型、重型便携式台钻或基钻连接电动工具。

特征：
1.高精密螺纹和圆锥孔紧密地连接在工具上。
2.外壳，锁孔，钥匙经过淬火。
3.夹爪特殊处理，具有良好耐磨性。
4.外壳齿轮和钥匙齿轮冷压成型。
5.精度准确可靠，持久耐用。

Application: Recommended for Light, Medium and Heavy-Duty portable bench or floor mounted power tools.

Features:
1.High precision threaded and tapered tightly mounts on the tools.
2.Sleeve, key hole and key are shaped by quenching.
3.Jaws are specifically engineered for tight tolerance production drilling.
4.Sleeve teeth and key holesare are shaped by cold pressing.
5.Super precision and durable.



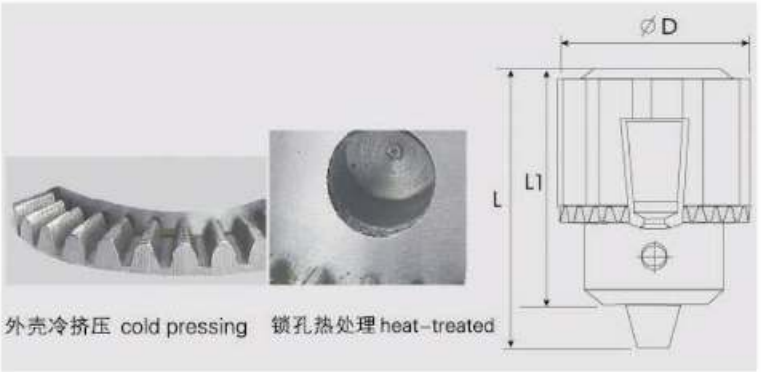

MORSE TAPER MOUNT

工厂编号 Art No	型 号 Model	夹持范围 mm	Capacity Inch	连接尺寸 Mount	D mm	L1 mm	L mm	精度 Precision
342002	J2106H	0.6-6	1/64-1/4	B10	31.5	42	50	0.18
343102	J2110H	1.0-10	1/32-3/8	B12	43	53	69	0.18
344202	J2113H	1.0-13	1/32-1/2	B16	53	69±0.5	87	0.18
345202	J2116M	3.0-16	1/8-5/8	B16	53	69	87	0.18
345302	J2116M	3.0-16	1/8-5/8	B18	53	69	87	0.18
346202	J2116H	1.0-16	1/32-5/8	B16	57	77.5	95	0.18
346302	J2116H	1.0-16	1/32-5/8	B18	57	77.5	95	0.18
348402	J2120H	5.0-20	3/16-3/4	B22	65	84	106	0.18

JACQUARD TAPER MOUNT

工厂编号 Art No	型 号 Model	夹持范围 mm	Capacity Inch	连接尺寸 Mount	D mm	L1 mm	L mm	精度 Precision
382102	J2106H	0.6-6	1/64-1/4	JT1	31.5	42	50	0.18
383202	J2110H	1.0-10	1/32-3/8	JT2	43	53	69	0.18
384402	J2113H	1.0-13	1/32-1/2	JT33	53	69.5	87	0.18
384702	J2113H	1.0-13	1/32-1/2	JT6	53	69.5	87	0.18
385302	J2116M	3.0-16	1/8-5/8	JT3	53	69.5	87	0.18
385402	J2116M	3.0-16	1/8-5/8	JT33	53	69.5	87	0.18
385702	J2116M	3.0-16	1/8-5/8	JT6	53	69.5	87	0.18
386302	J2116H	1.0-16	1/32-5/8	JT3	57	77.5	95	0.18
387502	J2119H	1.0-19	1/32-3/4	JT4	68	97	120	0.18
388302	J2120H	5.0-20	3/16-3/4	JT3	65	84	106	0.18

扳手钻夹头　重型
KEY TYPE CHUCK HEANY DUTY



适用范围：适用于中型，重型精密台钻，CNC机床。

特征：

1. 高精密度螺纹和圆锥孔紧密地连接在工具上。
2. 外壳，锁孔，钥匙经过淬火。
3. 夹爪特殊处理，具有良好耐磨性。
4. 外壳齿轮和钥匙齿轮冷压成型。
5. 防敲击装置，防止在作业中主体三孔被损坏而影响精度。
6. 精度准确可靠，持久耐用。

Application: Recommended for Medium and Heavy-Duty precision bench mounted power tools,CNC machine.

Features:

1. High precision threaded and tapered tightly mounts on the tools.
2. Sleeve, key hole and key are shaped by quenching.
3. Jaws are specifically engineered for tight tolerance production drilling.
4. Sleeve teech and key holesare are shaped by cold pressing.
5. Anti-hiting design prevent three holes of the body from damage in the drilling.
6. Super precision and durable.



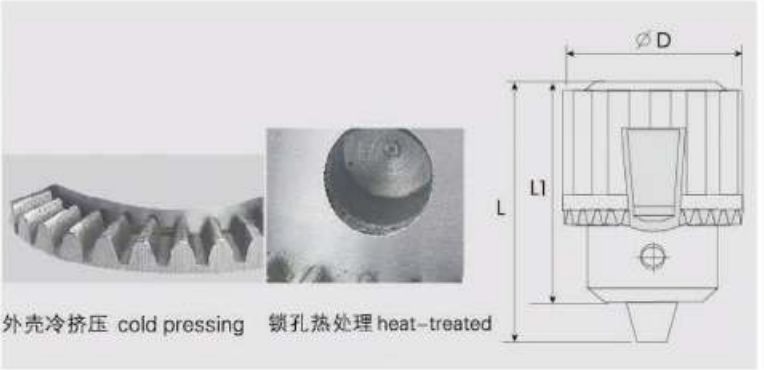

MORSE TAPER MOUNT

工厂编号 Art No	型 号 Model	夹持范围 mm	Capacity Inch	连接尺寸 Mount	D mm	L1 mm	L mm	精度 Precision
342003	J2106C	0.6-6	1/64-1/4	B10	31.5	44.5	50	0.15
343103	J2110C	1.0-10	1/32-3/8	B12	43	55	69	0.15
344203	J2113C	1.0-13	1/32-1/2	B16	53	72	87	0.15
346203	J2116C	1.0-16	1/32-5/8	B16	57	81	95	0.15
346303	J2116C	1.0-16	1/32-5/8	B18	57	81	95	0.15
348403	J2120C	5.0-20	3/16-3/4	B22	65.3	87	106	0.15

JACQUARD TAPER MOUNT

工厂编号 Art No	型 号 Model	夹持范围 mm	Capacity Inch	连接尺寸 Mount	D mm	L1 mm	L mm	精度 Precision
382103	J2106C	0.6-6	1/64-1/4	JT1	31.5	44.5	50	0.15
383203	J2110C	1.0-10	1/32-3/8	JT2	43	55	69	0.15
384403	J2113C	1.0-13	1/32-1/2	JT33	53	72	87	0.15
384703	J2113C	1.0-13	1/32-1/2	JT6	53	72	87	0.15
386303	J2116C	1.0-16	1/32-5/8	JT3	57	81	95	0.15
387503	J2119C	1.0-19	1/32-3/4	JT4	68	97	120	0.15
388303	J2120C	5.0-20	3/16-3/4	JT3	65.3	87	106	0.15

扳手钻夹头　重型
KEY TYPE CHUCK HEAVY DUTY

三钢® 牌 Sangang®



适用范围：适用于中型，重型精密台钻，CNC机床。

特征：

1.高精密度螺纹和圆锥孔紧密地连接在工具上。
2.外壳，锁孔，钥匙经过淬火。
3.夹爪特殊处理，具有良好耐磨性。
4.外壳齿轮和钥匙齿轮冷压成型。
5.精度准确可靠，持久耐用。

Application: Recommended for Medium and Heavy-Duty precision bench mounted power tools,CNC machine.

Features:

1.High precision threaded and tapered tightly mounts on the tools.
2.Sleeve, key hole and key are shaped by quenching.
3.Jaws are specifically engineered for tight tolerance production drilling.
4.Sleeve teech and key holesare are shaped by cold pressing.
5.Super precision and durable.



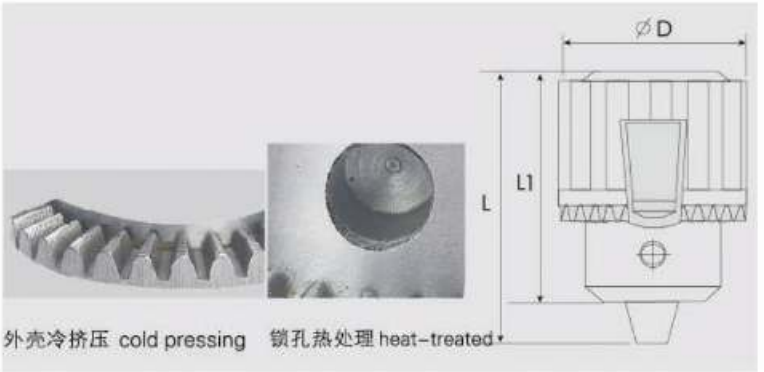

MORSE TAPER MOUNT

工厂编号 Art No	型 号 Model	夹持范围 mm	Capacity Inch	连接尺寸 Mount	D mm	L1 mm	L mm	精度 Precision
930005	J2106H	0.6-6	1/64-1/4	B10	31.5	41.7	50	0.18
901005	J2110C	1.0-10	1/32-3/8	B12	43	54	69	0.18
920105	J2113C	1.0-13	1/32-1/2	B16	53	69.5	87	0.18
913105	J2116C	1.0-16	1/32-5/8	B16	57	77.5	95	0.18
932205	J2116C	1.0-16	1/32-5/8	B18	57	77.5	95	0.18
907105	J2120C	5.0-20	3/16-3/4	B22	65.3	84	106	0.18

JACQUARD TAPER MOUNT

工厂编号 Art No	型 号 Model	夹持范围 mm	Capacity Inch	连接尺寸 Mount	D mm	L1 mm	L mm	精度 Precision
922205	J2106C	0.6-6	1/64-1/4	JT1	31.5	41.7	50	0.18
905205	J2110C	1.0-10	1/32-3/8	JT2	43	55	69	0.18
924105	J2113C	1.0-13	1/32-1/2	JT33	53	69.5	87	0.18
907305	J2113H	1.0-13	1/32-1/2	JT6	53	69.5	87	0.18
926705	J2216H	1.0-16	1/32-5/8	JT3	57	77.5	95	0.18
909402	J2119H	1.0-19	1/32-3/4	JT4	68	97	120	0.18
928302	J2120H	5.0-20	3/16-3/4	JT3	65.3	84	106	0.18

扳手钻夹头　重型
KEY TYPE CHUCK HEAVY DUTY

SANJIN



适用范围：轻型、中型、重型便携式台钻或基钻连接电动工具。

特征：

1.高精密螺纹和圆锥孔紧密地连接在工具上。
2.外壳，锁孔，钥匙经过淬火。
3.夹爪特殊处理，具有良好耐磨性。
4.外壳齿轮和钥匙齿轮冷压成型。
5.精度准确可靠，持久耐用。

Application:Recommended for Light, Medium and Heavy-Duty portable bench or floor mounted power tools.

Features:

1.High precision threaded and tapered tightly mounts on the tools.
2.Sleeve, key hole and key are shaped by quenching.
3.Jaws are specifically engineered for tight tolerance production drilling.
4.Sleeve teeth and key holesare are shaped by cold pressing.
5.Super precision and durable.



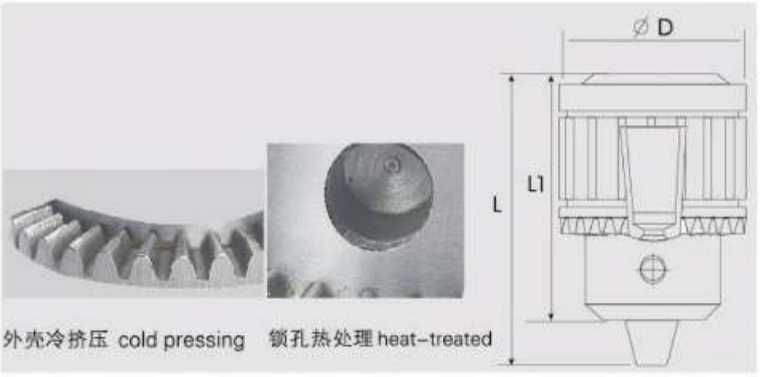

MORSE TAPER MOUNT

工厂编号 Art No	型 号 Model	夹持范围 mm	Capacity Inch	连接尺寸 Mount	D mm	L1 mm	L mm	精度 Precision
354203	J2113H-SJ	1-13	1/32-1/2	B16	53	69	86.50	
355203	J2116M-SJ	3-16	1/8-5/8	B16	53	69	86.50	
355303	J2116M-SJ	3-16	1/8-5/8	B18	53	69	86.50	
356203	J2116H-SJ	1-16	1/32-5/8	B16	57	77.5	97.5	
356303	J2116H-SJ	1-16	1/32-5/8	B18	60	82.5	101	
358403	J2120H-SJ	5-20	3/16-3/4	B22	60	82.5	101	

MORSE TAPER MOUNT

工厂编号 Art No	型 号 Model	夹持范围 mm	Capacity Inch	连接尺寸 Mount	D mm	L1 mm	L mm	精度 Precision
394403	J2113H-SJ	1-13	1/32-1/2	JT33	53	69	86.50	
394703	J2113H-SJ	1-13	1/32-1/2	JT6	53	69	86.50	
395403	J2116M-SJ	3-16	1/8-5/8	JT33	53	69	86.50	
395703	J2116M-SJ	3-16	1/8-5/8	JT6	53	69	86.50	
396503	J2116H-SJ	1-16	1/32-5/8	JT3	60	82.5	101	
398503	J2120H-SJ	5-20	3/16-3/4	JT3	60	82.5	101	

扳手钻夹头　重型　JP精密系列
KEY TYPE CHUCK HEAVY DUTY　JP SERIES

SAN OU CHUCK



适用范围：轻型、中型、重型便携式台钻或基钻连接电动工具。

特征：

1.高精密螺纹和圆锥孔紧密地连接在工具上。
2.外壳，锁孔，钥匙经过淬火。
3.夹爪特殊处理，具有良好耐磨性。
4.外壳齿轮和钥匙齿轮冷压成型。
5.精度准确可靠，持久耐用。

Application: Recommended for Light, Medium and Heavy-Duty portable bench or floor mounted power tools.

Features:

1.High precision threaded and tapered tightly mounts on the tools.
2.Sleeve, key hole and key are shaped by quenching.
3.Jaws are specifically engineered for tight tolerance production drilling.
4.Sleeve teeth and key holesare are shaped by cold pressing.
5.Super precision and durable.

三爪镶钨钢(在型号后加W为镶钨钢)
carbide jaws (the models followed with W means carbide)

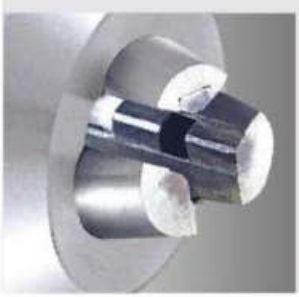







外壳冷挤压 cold pressing　锁孔热处理 heat-treated

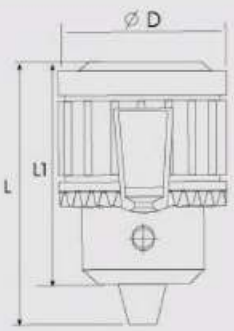

MORSE TAPER MOUNT

工厂编号 Art.No	型 号 Model	夹持范围 mm	Capacity Inch	连接尺寸 Mount	D mm	L1 mm	L mm	精度 Precision
442000	J2106W	0.6-6.5	1/64-1/4	B10	33.5	41.7	50	0.18
443100	J2110W	0.5-10	1/64-3/8	B12	45.5	53	69	0.18
444200	J2113W	0.5-13	1/64-1/2	B16	57	69.5	87	0.18
446300	J2116W	1.0-16	1/32-5/8	B18	58	77.5	95	0.18
447400	J2120W	5.0-20	3/16-3/4	B22	76	93.5	127	0.18
449500	J2125W	5.0-25	3/16-1	B24	93	112	146	0.18

MORSE TAPER MOUNT

工厂编号 Art.No	型 号 Model	夹持范围 mm	Capacity Inch	连接尺寸 Mount	D mm	L1 mm	L mm	精度 Precision
482100	J2206W	0.6-6	1/64-1/4	JT1	33.5	41.7	50	0.18
483200	J2210W	0.5-10	1/64-3/8	JT2	44.5	53	69	0.18
484400	J2213W	0.5-13	1/64-1/2	JT33	57	69.5	87	0.18
484700	J2213W	0.5-13	1/64-1/2	JT6	57	69.5	87	0.18
486300	J2216W	1.0-16	1/32-5/8	JT3	58	77.5	95	0.18
487500	J2120W	5.0-20	3/16-3/4	JT4	76	99.5	127	0.18
489600	J2225W	5.0-25	3/16-1	JT5	93	112	146	0.18



适用范围：轻型、中型、重型便携式台钻或基钻连接电动工具。

特征：

1.高精密螺纹和圆锥孔紧密地连接在工具上。
2.外壳，锁孔，钥匙经过淬火。
3.夹爪特殊处理，具有良好耐磨性。
4.外壳齿轮和钥匙齿轮冷压成型。
5.精度准确可靠，持久耐用。

Application:Recommended for Light, Medium and Heavy-Duty portable bench or floor mounted power tools.

Features:

1.High precision threaded and tapered tightly mounts on the tools.
2.Sleeve, key hole and key are shaped by quenching.
3.Jaws are specifically engineered for tight tolerance production drilling.
4.Sleeve teeth and key holesare are shaped by cold pressing.
5.Super precision and durable.

三爪镶钨钢(在型号后加W为镶钨钢)
carbide jaws (the models followed with W means carbide)







外壳冷挤压 cold pressing　锁孔热处理 heat-treated

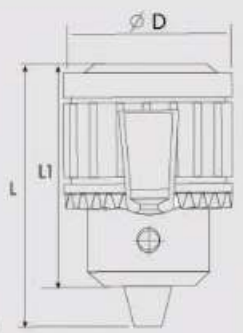

MORSE TAPER MOUNT

工厂编号 Art.No	型 号 Model	夹持范围 mm	Capacity Inch	连接尺寸 Mount	D mm	L1 mm	L mm	精度 Precision
442000	J2106W	0.6-6.5	1/64-1/4	B10	33.5	41.7	50	0.18
443100	J2110W	0.5-10	1/64-3/8	B12	45.5	53	69	0.18
444200	J2113W	0.5-13	1/64-1/2	B16	57	69.5	87	0.18
446300	J2116W	1.0-16	1/32-5/8	B18	58	77.5	95	0.18
447400	J2120W	5.0-20	3/16-3/4	B22	76	99.5	127	0.18
449500	J2125W	5.0-25	3/16-1	B24	93	112	146	0.18

MORSE TAPER MOUNT

工厂编号 Art.No	型 号 Model	夹持范围 mm	Capacity Inch	连接尺寸 Mount	D mm	L1 mm	L mm	精度 Precision
482100	J2206W	0.6-6	1/64-1/4	JT1	33.5	41.7	50	0.18
483200	J2210W	0.5-10	1/64-3/8	JT2	44.5	53	69	0.18
484400	J2213W	0.5-13	1/64-1/2	JT33	57	69.5	87	0.18
484700	J2213W	0.5-13	1/64-1/2	JT6	57	69.5	87	0.18
486300	J2216W	1.0-16	1/32-5/8	JT3	58	77.5	95	0.18
487500	J2120W	5.0-20	3/16-3/4	JT4	76	99.5	127	0.18
489600	J2225W	5.0-25	3/16-1	JT5	93	112	146	0.18

扳手钻夹头 KEY TYPE CHUCK

RM系列 RM SERIES

SAN OU CHUCK



STYLE A STYLE B

適用范围：轻型、中型、重型便携式台钻或基钻连接电动工具。

特征：

1.高精密螺纹和圆锥孔紧密地连接在工具上。
2.外壳，锁孔，钥匙经过淬火。
3.夹爪特殊处理，具有良好耐磨性。
4.外壳齿轮和钥匙齿轮冷压成型。
5.精度准确可靠，持久耐用。

Application:Recommended for Light, Medium and Heavy-Duty portable bench or floor mounted power tools.

Features:

1.High precision threaded and tapered tightly mounts on the tools.
2.Sleeve, key hole and key are shaped by quenching.
3.Jaws are specifically engineered for tight tolerance production drilling.
4.Sleeve teeth and key holesare are shaped by cold pressing.
5.Super precision and durable.





外壳冷挤压 cold pressing

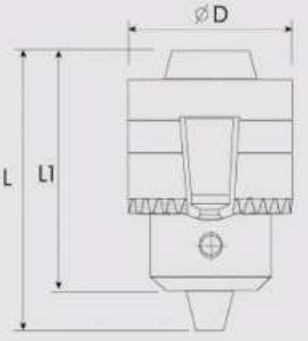

THREAD MOUNT: UNF、METRIC

工厂编号 Art.No	型 号 Model	夹持范围 mm	Capacity Inch	连接尺寸 Mount	D mm	L1 mm	L mm	精度 Precision
103011	J3110M	1.0-10	1/16-3/8	3/8-24UNF	37	51	60	0.25
103111	J3110M	1.0-10	1/16-3/8	1/2-20UNF	37	51	60	0.25
104011	J3113M	1.5-13	1/16-1/2	3/8-24UNF	37	58.5	73	0.25
104111	J3113M	1.5-13	1/16-1/2	1/2-20UNF	37	58.5	73	0.25

MORSE TAPER MOUNT

工厂编号 Art.No	型 号 Model	夹持范围 mm	Capacity Inch	连接尺寸 Mount	D mm	L1 mm	L mm	精度 Precision
344203	J2113H	1.0-13	1/32-1/2	B16	53	69.5	87	0.18
105211	J2516M	3.0-16	1/8-5/8	B16	53	69.5	87	0.18
105311	J2516M	3.0-16	1/8-5/8	B18	53	69.5	87	0.18
346203	J2116H	1.0-16	1/32-5/8	B16	57	77.5	95	0.18
346303	J2116H	1.0-16	1/32-5/8	B18	57	77.5	95	0.18
348403	J2120H-RM	5.0-20	3/16-3/4	B22	65	93.5	115	0.18
350503	J2126H-RM	5.0-25	3/16-1	B24	80	119	146	0.18

JACQUARD TAPER MOUNT

工厂编号 Art.No	型 号 Model	夹持范围 mm	Capacity Inch	连接尺寸 Mount	D mm	L1 mm	L mm	精度 Precision
384403	J2113H	1.0-13	1/32-1/2	JT33	53	69	87	0.18
384703	J2113H	1.0-13	1/32-1/2	JT6	53	69	87	0.18
386303	J2116H	1.0-16	1/32-5/8	JT3	57	77.5	95	0.18
386403	J2116H	1.0-16	1/32-5/8	JT33	57	77.5	95	0.18
388303	J2120H-RM	5.0-20	3/16-3/4	JT3	65	93.5	115	0.18
390503	J2126H-RM	5.0-25	3/16-1	JT4	80	119	146	0.18

自紧式钻夹头　重 型

SELF-TIGHTEN CHUCK SYSTEM HEAVY DUTY



适用范围：CNC加工中心。

特征：

- 1.具有高精度，高夹紧，高可靠性和稳定性。
- 2.易损部件淬火处理。
- 3.具有自紧功能，轻轻夹紧钻头即可，在钻孔中随着扭距的增加而同步增加夹持力，并能产生明显的高强度夹持力，从而防止钻头打滑。

Application: Recommended for CNC machining center.

Features:

- 1.High precision,and high gripping force,high reliability and stability.
- 2.Flimsy parts are shaped by quenching.
- 3.Self-tighting feature automatically increase gripping force proportional to increase torque to prevent tool shank slippage.





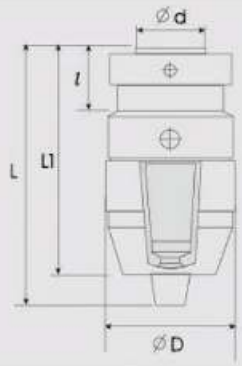

J01、02 SERIES MORSE、JACQUARD SHORT TAPER STOCK　　J01、02系列 莫氏、贾格短锥连接

工厂编号 Art.No	型 号 Model	夹持范围 Capacity mm	锥孔号 Tapering Hole Number	锥角 Taper	d mm	l mm	D mm	L mm	L1 mm	Kg	检查棒 Check rod 大棒Ø Big rod	小棒 mm Small rod	精度 Precision	报价 Unit Price
730002	J0104H	0.3–4 1/16" –5/32"	JT0	2° 49' 24.7"	6.350	11.112	29	60.8	55	–	4×45	–	0.05	
701002	J0106H	0.5–6	B10	2° 51' 26.7"	10.094	14.500	34	71.2	64	0.32	6×65	–	0.05	
720102	J0106H	1/16" –1/4"	JT1	4° 24' 53.1"	9.754	16.669								
713102	J0108H	0.5–8	B12	2° 51' 26.7"	12.065	18.500	36	75.5	68	0.32	8×80	–	0.05	
732202	J0108H	1/16" –5/16"	JT2	4° 40' 11.6"	14.199	22.225								
707102	J0110H	1–10	B12	2° 51' 26.7"	12.065	18.500	36	75.5	68	0.70	10×95	6×65	0.05	
722202	J0110H	1/32" –3/8"	JT2	4° 40' 11.6"	14.199	22.225								
705202	J0113H	1–13	B16	2° 51' 41.0"	15.733	24.000	44	94.5	84.5	0.96	13×105	6×65	0.05	
724102	J0113H	1/32" –1/2"	JT33	3° 38' 13.4"	15.850	25.400								
707302	J0116H	1–16	B18	2° 51' 41.0"	17.780	32.000	51	112	101	1.24	16×110	8×80	0.05	
726702	J0116H	1/32" –5/8"	JT6	2° 58' 24.8"	17.170	25.400								
709402	J0120H	5–20	B22	2° 52' 31.5"	21.793	40.500	57	129.2	116	1.70	20×120	10×95	0.05	
728302	J0120H	3/16" –3/4"	JT3	3° 3' 3"	20.599	30.956								

自紧式带锁钻夹头　重 型

SELF-TIGHTEN CHUCK WITH LOCKING SYSTEM LIGHT DUTY

三钢牌 Sangang®





适用范围：适用于CNC加工中心，各种便携式台钻。

特征：

- 1.具有自紧功能，轻轻夹紧钻头即可，在钻孔中随着扭距的增加而同步增加夹持力，并能产生明显的高强度夹持力，从而防止钻头打滑。
- 2.带有锁紧装置，确保夹头在作业中突然停止时不会被松开，也确保在反转作业中不会被松开。
- 3.具有高精度，高夹紧，高可靠性和稳定性。
- 4.易损部件淬火处理。
- 5.夹头可配有松开扳手，在夹紧力过紧时用扳手协助松开。

Application: Recommended for CNC maching center ,Varietes of portable bench drills

Features:

- 1.Self-tighting feature automatically increase gripping force proportion to increase torque to prevent tool shank slippage.
- 2.Positive lock mechanism prevents chucks from loosening in operation when suddenly stopped or in the reverse operation.
- 3.High precision,and high gripping force,high reliability and stability.
- 4.Flimsy parts are shaped by quenching.
- 5.The chuck can be attached with a loosed key.It can be used when the clamping force was too strong.

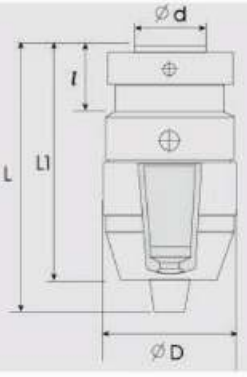

J01、02 SERIES MORSE、JACQUARD SHORT TAPER STOCK　　**J01、02系列 莫氏、贾格短锥连接**

工厂编号 Art.No	型 号 Model	夹持范围 Capacity mm	锥孔号 Tapering Hole Number	锥角 Taper	d mm	l mm	D mm	L mm	L1 mm	Kg	检查棒 Check rod 大棒 Big rod	检查棒 Check rod 小棒 mm Small rod	精度 Precision	报价 Unit Price
930002	J0204H	0.3–4 1/16" –5/32"	JT0	2° 49' 24.7"	6.350	11.112	29	60.8	55	–	4×45	–	0.09	
901002	J0106H	0.5–6	B10	2° 51' 26.7"	10.094	14.500	34	71.2	64	0.32	6×65	–	0.09	
920102	J0206H	1/16" –1/4"	JT1	4° 24' 53.1"	9.754	16.669								
913102	J0108H	0.5–8	B12	2° 51' 26.7"	12.065	18.500	36	75.5	68	0.32	8×80	–	0.09	
932202	J0208H	1/16" –5/16"	JT2	4° 40' 11.6"	14.199	22.225								
907102	J0110H	1–10	B12	2° 51' 26.7"	12.065	18.500	36	75.5	68	0.70	10×95	6×65	0.09	
922202	J0210H	1/32" –3/8"	JT2	4° 40' 11.6"	14.199	22.225								
905202	J0113H	1–13	B16	2° 51' 41.0"	15.733	24.000	44	94.5	84.5	0.96	13×105	6×65	0.09	
924102	J0213H	1/32" –1/2"	JT33	3° 38' 13.4"	15.850	25.400								
907302	J0116H	1–16	B18	2° 51' 41.0"	17.780	32.000	51	112	101	1.24	16×110	8×80	0.09	
926702	J0216H	1/32" –5/8"	JT6	2° 58' 24.8"	17.170	25.400								
909402	J0120H	5–20	B22	2° 52' 31.5"	21.793	40.500	57	129.2	116	1.70	20×120	10×95	0.09	
928302	J0220H	3/16" –3/4"	JT3	3° 3' 3"	20.599	30.956								

自紧式钻夹头　轻 型
SELF-TIGHTEN CHUCK SYSTEM LIGHT DUTY

SAN OU CHUCK



适用范围：CNC加工中心。

特征：

1.具有高精度，高夹紧，高可靠性和稳定性。
2.易损部件淬火处理。
3.具有自紧功能，轻轻夹紧钻头即可，在钻孔中随着扭距的增加而同步增加夹持力，并能产生明显的高强度夹持力，从而防止钻头打滑。

Application: Recommended for CNC machining center.

Features:

1.High precision,and high gripping force,high reliability and stability.
2.Flimsy parts are shaped by quenching.
3.Self-tighting feature automatically increase gripping force proportional to increased torque to prevent tool shank slippage.



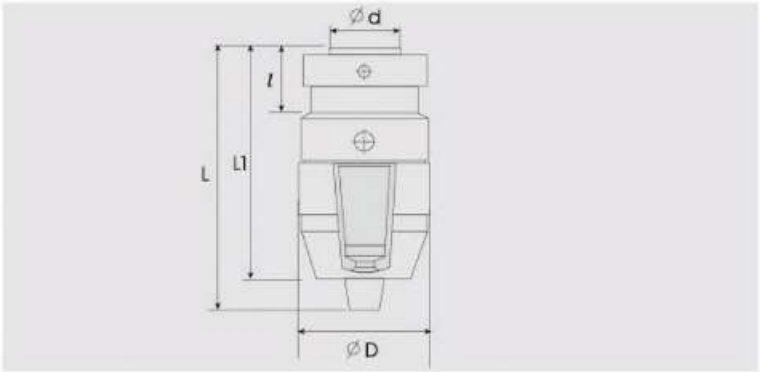

J01、02 SERIES MORSE、JACQUARD SHORT TAPER STOCK　　**J01、02系列 莫氏、贾格短锥连接**

工厂编号 Art.No	型 号 Model	夹持范围 Capacity mm	锥孔号 Tapering Hole Number	锥角 Taper	d mm	l mm	D mm	L mm	L1 mm	Kg	检查棒 Check rod 大棒∅ Big rod	小棒 mm Small rod	精度 Precision	力距 N.M	报价 Unit Price
820001	J0106L	0.5–6	B10	2° 51′ 26.7″	10.094	14.500	34	71.2	61.4	0.32	6×65	–	0.20	3	
821101	J0206L	1/64″ –1/4″	JT1	4° 24′ 53.1″	9.754	16.669									
814201	J0108L	0.5–8	B12	2° 51′ 26.7″	12.065	18.500	36.3	77	69	0.32	8×80	–	0.20	4	
833201	J0208L	1/64″ –5/16″	JT2	4° 40′ 11.6″	14.199	22.225									
804201	J0110L	1–10	B12	2° 51′ 26.7″	12.065	18.500	36	75.5	68	0.70	10×95	6×65	0.20	6	
823201	J0210L	1/32″ –3/8″	JT2	4° 40′ 11.6″	14.199	22.225									
806301	J0113L	1–13	B16	2° 51′ 41.0″	15.733	24.000	44	94.5	84.5	0.96	13×105	6×65	0.20	12	
825401	J0213L	1/32″ –1/2″	JT33	3° 38′ 13.4″	15.850	25.400									
808301	J0116L	1–16	B18	2° 51′ 41.0″	17.780	32.000	51	106	92.5	1.24	16×110	8×80	0.20	14	
827701	J0216L	1/32″ –5/8″	JT6	2° 58′ 24.8″	17.170	25.400									
810401	J0120L	5–20	B22	2° 52′ 31.5″	21.793	40.500	57	129.2	116	1.70	20×120	10×95	0.20	16	
829301	J0220L	3/16″ –3/4″	JT3	3° 3′ 3″	20.599	30.956									

自紧式带锁钻夹头

SELF-TIGHTEN CHUCK WITH LOCK SYSTEM

SAN OU CHUCK



适用范围：适用于大功率冲击电钻。

特征：

- 1.具有自紧功能，轻轻夹紧钻头即可，在钻孔中随着扭距的增加而同步增加夹持力，并能产生明显的高强度夹持力，从而防止钻头打滑。
- 2.带有锁紧装置，确保夹头在作业中突然停止时不会被松开，也确保在反转作业中不会被松开。
- 3.具有高精度，高夹紧，高可靠性和稳定性。
- 4.易损部件淬火处理。
- 5.夹头可配有松开扳手，在夹紧力过紧时用扳手协助松开。

Application: Recommended for power impact electric drills.

Features:

- 1.Self-tighting feature automatically increase gripping force proportion to increase torque to prevent tool shank slippage.
- 2.Positive lock mechanism prevents chucks from loosening in operation when suddenly stopped or in the reverse operation.
- 3.High precision,and high gripping force,high reliability and stability.
- 4.Flimsy parts are shaped by quenching.
- 5.The chuck can be attached with a loosed key.It can be used when the clamping force was too strong.



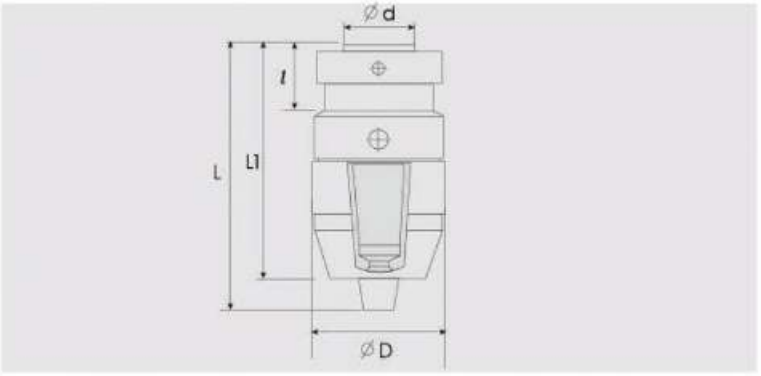

工厂编号 Art.No	型 号 Model	夹持范围 Capacity mm	Inch	连接尺寸 Mount	d mm	D mm	L1 mm	L mm	Kg	检查棒 Check rod 大棒 Big rod	小棒 mm Small rod	精度 Precision M级	P级	力距 N.M	报价 Unit Price
860001	J0413L-A	1-13	1/32-1/2	5/8-16UNF	24	44	83	93	1.00	13×105	6×65	0.05	0.10	12	
860002	J0413L-A	1-13	1/32-1/2	1/2-20UNF	24	44	83	93	1.00	13×105	6×65	0.05	0.10	12	
860003	J0413L-A	1-13	1/32-1/2	JT6	24	44	83	93	1.00	13×105	6×65	0.05	0.10	12	
860004	J0413L-A	1-13	1/32-1/2	B16	24	44	83	93	1.00	13×105	6×65	0.05	0.10	12	

自紧式钻夹头　重 型

SELF-TIGHTEN CHUCK SYSTEM HEAVY DUTY

SAN OU CHUCK



STYLE B　　STYLE A

适用范围：CNC加工中心。

特征：

1.具有高精度，高夹紧，高可靠性和稳定性。
2.易损部件淬火处理。
3.具有自紧功能，轻轻夹紧钻头即可，在钻孔中随着扭距的增加而同步增加夹持力，并能产生明显的高强度夹持力，从而防止钻头打滑。

Application: Recommended for CNC machining center.

Features:

1.High precision,and high gripping force,high reliability and stability.
2.Flimsy parts are shaped by quenching.
3.Self-tighting feature automatically increase gripping force proportional to increased torque to prevent tool shank slippage.



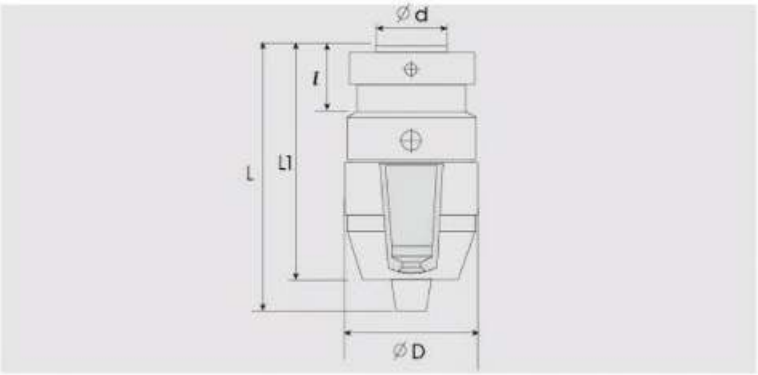

J01、02 SERIES MORSE、JACQUARD SHORT TAPER STOCK　　**J01、02系列 莫氏、贾格短锥连接**

工厂编号 Art.No	型 号 Model	夹持范围 Capacity mm	锥孔号 Tapering Hole Number	锥角 Taper	d mm	l mm	D mm	L mm	L1 mm	Kg	检查棒 Check rod 大棒Ø Big rod	检查棒 Check rod 小棒 mm Small rod	精度 Precision M级	精度 Precision P级	力距 N.M	报价 Unit Price
701001	J0106H	0.5–6	B10	2° 51′ 26.7″	10.094	14.500	34	73.5	64.5	0.32	6×65	–	0.05	0.08	3	
720101	J0206H	1/64″ –1/4″	JT1	4° 24′ 53.1″	9.754	16.669										
713101	J0108H	0.5–8	B12	2° 51′ 26.7″	12.065	18.500	34	71	64.5	0.50	8×80	–	0.05	0.10	4	
732201	J0208H	1/64″ –5/16″	JT2	4° 40′ 11.6″	14.199	22.225										
707101	J0110H	1–10	B12	2° 51′ 26.7″	12.065	18.500	44	93	81.2	0.70	10×95	6×65	0.05	0.10	6	
722201	J0210H	1/32″ –3/8″	JT2	4° 40′ 11.6″	14.199	22.225										
705201	J0113H	1–13	B16	2° 51′ 41.0″	15.733	24.000	51	105	94	0.96	13×105	6×65	0.05	0.10	12	
724101	J0213H	1/32″ –1/2″	JT33	3° 38′ 13.4″	15.850	25.400										
707301	J0116H	1–16	B18	2° 51′ 41.0″	17.780	32.000	54	115.5	104	1.24	16×110	8×80	0.05	0.10	14	
726201	J0216H	1/32″ –5/8″	JT6	2° 58′ 24.8″	17.170	25.400										
709401	J0120H	5–20	B22	2° 52′ 31.5″	21.793	40.500	57	129.2	115	1.70	20×120	10×95	0.05	0.10	16	
728301	J0220H	3/16″ –3/4″	JT3	3° 3′ 3″	20.599	30.956										

自紧式钻夹头　重 型
SELF-TIGHTEN CHUCK SYSTEM HEAVY DUTY

SAN OU CHUCK



适用范围：CNC加工中心。

特征：

1.具有高精度，高夹紧，高可靠性和稳定性。
2.易损部件淬火处理。
3.具有自紧功能，轻轻夹紧钻头即可，在钻孔中随着扭距的增加而同步增加夹持力，并能产生明显的高强度夹持力，从而防止钻头打滑。

Application: Recommended for CNC machining center.

Features:

1.High precision,and high gripping force,high reliability and stability.
2.Flimsy parts are shaped by quenching.
3.Self-tighting feature automatically increase gripping force proportional to increase torque to prevent tool shank slippage.



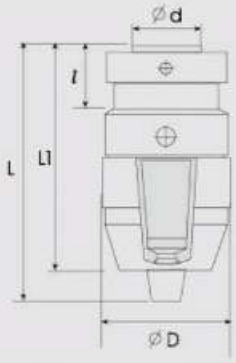

J01、02 SERIES MORSE、JACQUARD SHORT TAPER STOCK　　**J01、02系列 莫氏、贾格短锥连接**

工厂编号 Art.No	型 号 Model	夹持范围 Capacity mm	锥孔号 Tapering Hole Number	锥角 Taper	d mm	l mm	D mm	L(±1) mm	L1(±0.5) mm	Kg	检查棒 Check rod 大棒Ø Big rod	小棒 mm Small rod	精度 Precision M级	P级	力距 N M	报价 Unit Price
730001	J0204	0.3–4 1/64" –5/32"	JT0	2° 49' 24.7"	6.350	11.112	29	60.8	55	–	4×45	–	0.05	0.08	1.2	
701001	J0106	0.5–6	B10	2° 51' 26.7"	10.094	14.500	34	71.5	64	0.32	6×65	–	0.05	0.10	3	
720101	J0206	1/64" –1/4"	JT1	4° 24' 53.1"	9.754	16.669										
713101	J0108	0.5–8	B12	2° 51' 26.7"	12.065	18.500	43.6	91.5	82.2	0.50	8×80	–	0.05	0.10	4	
732201	J0208	1/64" –5/16"	JT2	4° 40' 11.6"	14.199	22.225										
707101	J0110	1–10	B12	2° 51' 26.7"	12.065	18.500	43.6	94.5	85.5	0.70	10×95	6×65	0.05	0.10	6	
722201	J0210	1/32" –3/8"	JT2	4° 40' 11.6"	14.199	22.225										
705201	J0113	1–13	B16	2° 51' 41.0"	15.733	24.000	51	103.5	92.5	0.96	13×105	6×65	0.05	0.10	12	
724101	J0213	1/32" –1/2"	JT33	3° 38' 13.4"	15.850	25.400										
707301	J0116	1–16	B18	2° 51' 41.0"	17.780	32.000	56.6	118	104	1.24	16×110	8×80	0.05	0.10	14	
726701	J0216	1/32" –5/8"	JT6	2° 58' 24.8"	17.170	25.400										
709401	J0120	5–20	B22	2° 52' 31.5"	21.793	40.500	59	130	118	1.70	20×120	10×95	0.05	0.10	16	
728301	J0220	3/16" –3/4"	JT3	3° 3' 3"	20.599	30.956										

自紧式钻夹头　重 型
SELF-TIGHTEN CHUCK SYSTEM HEAVY DUTY

SAN OU CHUCK



适用范围：CNC加工中心。

特征：

1.具有高精度，高夹紧，高可靠性和稳定性。
2.易损部件淬火处理。
3.具有自紧功能，轻轻夹紧钻头即可，在钻孔中随着扭距的增加而同步增加夹持力，并能产生明显的高强度夹持力，从而防止钻头打滑。

Application: Recommended for CNC machining center.

Features:

1.High precision,and high gripping force,high reliability and stability.
2.Flimsy parts are shaped by quenching.
3.Self-tighting feature automatically increase gripping force proportional to increase torque to prevent tool shank slippage.



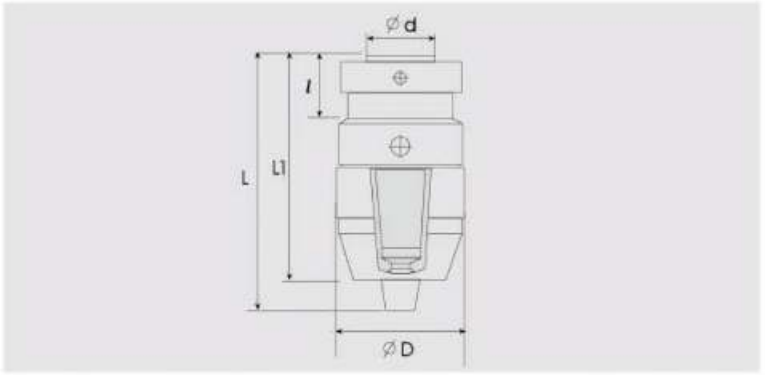

J01、02 SERIES MORSE、JACQUARD SHORT TAPER STOCK　　**J01．02系列 莫氏． 贾格短锥连接**

工厂编号 Art.No	型 号 Model	夹持范围 Capacity mm	锥孔号 Tapering Hole Number	锥角 Taper	d mm	l mm	D mm	L(±1) mm	L1(±0.5) mm	Kg	检查棒 Check rod 大棒Ø Big rod	小棒 mm Small rod	精度 Precision M级	P级	力距 N.M	报价 Unit Price
850011	J0104H-A	0.3-4 1/64" -5/32"	JT0	2° 49' 24.7"	6.350	11.112	29	60.8	55	-	4×45	-	0.05	0.08	1.2	
850012	J0106H-A	0.5-6	B10	2° 51' 26.7"	10.094	14.500	34	71.5	64	0.32	6×65	-	0.05	0.10	3	
850013	J0106H-A	1/64" -1/4"	JT1	4° 24' 53.1"	9.754	16.669										
850014	J0108H-A	0.5-8	B12	2° 51' 26.7"	12.065	18.500	43.6	91.5	82.2	0.50	8×80	-	0.05	0.10	4	
850015	J0108H-A	1/64" -5/16"	JT2	4° 40' 11.6"	14.199	22.225										
850016	J0110H-A	1-10	B12	2° 51' 26.7"	12.065	18.500	43.6	94.5	85.5	0.70	10×95	6×65	0.05	0.10	6	
850017	J0110H-A	1/32" -3/8"	JT2	4° 40' 11.6"	14.199	22.225										
850018	J0113H-A	1-13	B16	2° 51' 41.0"	15.733	24.000	51	103.5	92.5	0.96	13×105	6×65	0.05	0.10	12	
850019	J0113H-A	1/32" -1/2"	JT33	3° 38' 13.4"	15.850	25.400										
850020	J0116H-A	1-16	B18	2° 51' 41.0"	17.780	32.000	56.6	118	104	1.24	16×110	8×80	0.05	0.10	14	
850021	J0116H-A	1/32" -5/8"	JT6	2° 58' 24.8"	17.170	25.400										
850022	J0120H-A	5-20	B22	2° 52' 31.5"	21.793	40.500	59	130	118	1.70	20×120	10×95	0.05	0.10	16	
850023	J0120H-A	3/16" -3/4"	JT3	3° 3' 3"	20.599	30.956										

自紧式带锁钻夹头

SELF-TIGHTEN CHUCK WITH LOCK SYSTEM

SAN OU CHUCK



适用范围：CNC加工中心。

特征：

1.具有高精度，高夹紧，高可靠性和稳定性。
2.易损部件淬火处理。
3.具有自紧功能，轻轻夹紧钻头即可，在钻孔中随着扭距的增加而同步增加夹持力，并能产生明显的高强度夹持力，从而防止钻头打滑。

Application: Recommended for CNC machining center.

Features:

1.High precision,and high gripping force,high reliability and stability.
2.Flimsy parts are shaped by quenching.
3.Self-tighting feature automatically increase gripping force proportional to increase torque to prevent tool shank slippage.



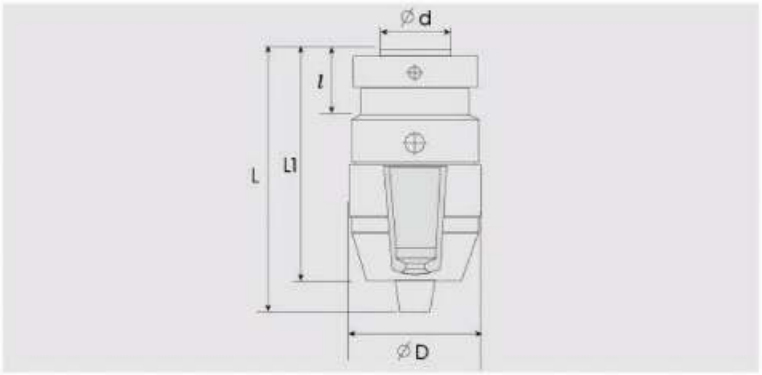

J01、02 SERIES MORSE、JACQUARD SHORT TAPER STOCK

J01、02系列 莫氏、贾格短锥连接

工厂编号 Art.No	型 号 Model	夹持范围 Capacity mm	锥孔号 Tapering Hole Number	锥角 Taper	d mm	l mm	D mm	L(±1) mm	L1(±0.5) mm	Kg	检查棒 Check rod 大棒∅ Big rod	小棒 mm Small rod	精度 Precision M级	P级	力距 N.M	报价 Unit Price
882031	J0104H-A	0.3-4 1/64" -5/32"	JT0	2° 49' 24.7"	6.350	11.112	29	60.8	55	-	4×45	-	0.05	0.08	1.2	
882032	J0106H-A	0.5-6	B10	2° 51' 26.7"	10.094	14.500	34	71.5	64	0.32	6×65	-	0.05	0.10	3	
882033	J0106H-A	1/64" -1/4"	JT1	4° 24' 53.1"	9.754	16.669										
882034	J0108H-A	0.5-8	B12	2° 51' 26.7"	12.065	18.500	43.6	91.5	82.2	0.50	8×80	=	0.05	0.10	4	
882035	J0108H-A	1/64" -5/16"	JT2	4° 40' 11.6"	14.199	22.225										
882036	J0110H-A	1-10	B12	2° 51' 26.7"	12.065	18.500	43.6	94.5	85.5	0.70	10×95	6×65	0.05	0.10	6	
882037	J0110H-A	1/32" -3/8"	JT2	4° 40' 11.6"	14.199	22.225										
882038	J0113H-A	1-13	B16	2° 51' 41.0"	15.733	24.000	51	103.5	92.5	0.96	13×105	6×65	0.05	0.10	12	
882039	J0113H-A	1/32" -1/2"	JT33	3° 38' 13.4"	15.850	25.400										
882040	J0116H-A	1-16	B18	2° 51' 41.0"	17.780	32.000	56.6	118	104	1.24	16×110	8×80	0.05	0.10	14	
882041	J0116H-A	1/32" -5/8"	JT6	2° 58' 24.8"	17.170	25.400										
882042	J0120H-A	5-20	B22	2° 52' 31.5"	21.793	40.500	59	130	118	1.70	20×120	10×95	0.05	0.10	16	
882043	J0120H-A	3/16" -3/4"	JT3	3° 3' 3"	20.599	30.956										

自紧式钻夹头　重 型

SELF-TIGHTEN CHUCK SYSTEM HEAVY DUTY

SAN OU CHUCK



适用范围：CNC加工中心。

特征：

1.具有高精度，高夹紧，高可靠性和稳定性。
2.易损部件淬火处理。
3.具有自紧功能，轻轻夹紧钻头即可，在钻孔中随着扭距的增加而同步增加夹持力，并能产生明显的高强度夹持力，从而防止钻头打滑。

Application: Recommended for CNC machining center.

Features:

1.High precision,and high gripping force,high reliability and stability.
2.Flimsy parts are shaped by quenching.
3.Self-tighting feature automatically increase gripping force proportional to increase torque to prevent tool shank slippage.



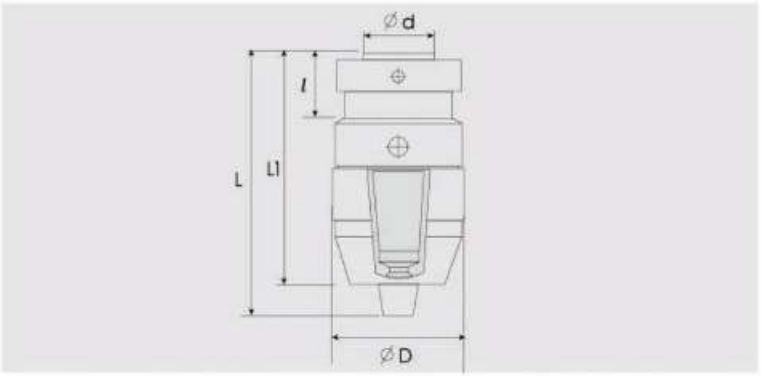

J01、02 SERIES MORSE、JACQUARD SHORT TAPER STOCK　　**J01、02系列 莫氏、贾格短锥连接**

工厂编号 Art.No	型 号 Model	夹持范围 Capacity mm	锥孔号 Tapering Hole Number	锥角 Taper	d mm	t mm	D mm	L(±1) mm	L1(±0.5) mm	Kg	检查棒 Check rod 大棒∅ Big rod	小棒 mm Small rod	精度 Precision M级	P级	力距 N.M	报价 Unit Price
730201	J0104H-A	0.3-4 1/64" -5/32"	JT0	2° 49' 24.7"	6.350	11.112	29	60.8	55	-	4×45	-	0.05	0.08	1.2	
730202	J0106H-A	0.5-6	B10	2° 51' 26.7"	10.094	14.500	34	71.5	64	0.32	6×65	-	0.05	0.10	3	
730203	J0106H-A	1/64" -1/4"	JT1	4° 24' 53.1"	9.754	16.669										
730204	J0108H-A	0.5-8	B12	2° 51' 26.7"	12.065	18.500	43.6	91.5	82.2	0.50	8×80	-	0.05	0.10	4	
730205	J0108H-A	1/64" -5/16"	JT2	4° 40' 11.6"	14.199	22.225										
730206	J0110H-A	1-10	B12	2° 51' 26.7"	12.065	18.500	43.6	94.5	85.5	0.70	10×95	6×65	0.05	0.10	6	
730207	J0110H-A	1/32" -3/8"	JT2	4° 40' 11.6"	14.199	22.225										
730208	J0113H-A	1-13	B16	2° 51' 41.0"	15.733	24.000	51	103.5	92.5	0.96	13×105	6×65	0.05	0.10	12	
730209	J0113H-A	1/32" -1/2"	JT33	3° 38' 13.4"	15.850	25.400										
730210	J0116H-A	1-16	B18	2° 51' 41.0"	17.780	32.000	56.6	118	104	1.24	16×110	8×80	0.05	0.10	14	
730211	J0116H-A	1/32" -5/8"	JT6	2° 58' 24.8"	17.170	25.400										
730212	J0120H-A	5-20	B22	2° 52' 31.5"	21.793	40.500	59	130	118	1.70	20×120	10×95	0.05	0.10	16	
730213	J0120H-A	3/16" -3/4"	JT3	3° 3' 3"	20.599	30.956										

自紧式钻夹头　重 型
SELF-TIGHTEN CHUCK SYSTEM HEAVY DUTY

SAN OU CHUCK



适用范围：CNC加工中心。

特征：

- 1.具有高精度，高夹紧，高可靠性和稳定性。
- 2.易损部件淬火处理。
- 3.具有自紧功能，轻轻夹紧钻头即可，在钻孔中随着扭距的增加而同步增加夹持力，并能产生明显的高强度夹持力，从而防止钻头打滑。

Application: Recommended for CNC machining center.

Features:

- 1.High precision,and high gripping force,high reliability and stability.
- 2.Flimsy parts are shaped by quenching.
- 3.Self-tighting feature automatically increase gripping force proportional to increase torque to prevent tool shank slippage.



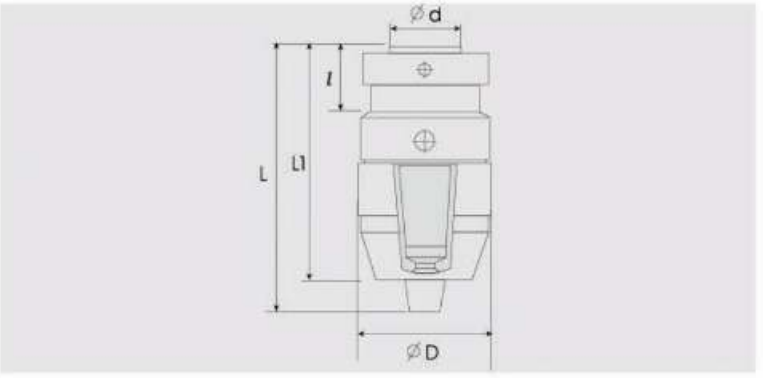

J01、02 SERIES MORSE、JACQUARD SHORT TAPER STOCK　　**J01、02系列 莫氏、贾格短锥连接**

工厂编号 Art.No	型 号 Model	夹持范围 Capacity mm	锥孔号 Tapering Hole Number	锥角 Taper	d mm	l mm	D mm	L(±1) mm	L1(±0.5) mm	Kg	检查棒 Check rod 大棒 Ø Big rod	检查棒 Check rod 小棒 mm Small rod	精度 Precision M级	精度 Precision P级	力距 N M	报价 Unit Price
756241	J0104H-A	0.3-4 1/64" -5/32"	JT0	2° 49' 24.7"	6.350	11.112	29	60.8	55	-	4×45	-	0.05	0.08	1.2	
756242	J0106H-A	0.5-6	B10	2° 51' 26.7"	10.094	14.500	34	71.5	64	0.32	6×65	-	0.05	0.10	3	
756243	J0106H-A	1/64" -1/4"	JT1	4° 24' 53.1"	9.754	16.669										
756244	J0108H-A	0.5-8	B12	2° 51' 26.7"	12.065	18.500	43.6	91.5	82.2	0.50	8×80	-	0.05	0.10	4	
756245	J0108H-A	1/64" -5/16"	JT2	4° 40' 11.8"	14.199	22.225										
756246	J0110H-A	1-10	B12	2° 51' 26.7"	12.065	18.500	43.6	94.5	85.5	0.70	10×95	6×65	0.05	0.10	6	
756247	J0110H-A	1/32" -3/8"	JT2	4° 40' 11.8"	14.199	22-225										
756248	J0113H-A	1-13	B16	2° 51' 41.0"	15.733	24.000	51	103.5	92.5	0.96	13×105	6×65	0.05	0.10	12	
756249	J0113H-A	1/32" -1/2"	JT33	3° 38' 13.4"	15.850	25.400										
756250	J0116H-A	1-16	B18	2° 51' 41.0"	17.780	32.000	56.6	118	104	1.24	16×110	8×80	0.05	0.10	14	
756251	J0116H-A	1/32" -5/8"	JT6	2° 58' 24.8"	17.170	25.400										
756252	J0120H-A	5-20	B22	2° 52' 31.5"	21.793	40.500	59	130	118	1.70	20×120	10×95	0.05	0.10	16	
756253	J0120H-A	3/16" -3/4"	JT3	3° 3' 3"	20.599	30.956										

自紧式钻夹头　重 型
SELF-TIGHTEN CHUCK SYSTEM HEAVY DUTY

SAN OU CHUCK



适用范围：CNC加工中心。

特征：

- 1.具有高精度，高夹紧，高可靠性和稳定性。
- 2.易损部件淬火处理。
- 3.具有自紧功能，轻轻夹紧钻头即可，在钻孔中随着扭距的增加而同步增加夹持力，并能产生明显的高强度夹持力，从而防止钻头打滑。

Application: Recommended for CNC machining center.

Features:

- 1.High precision,and high gripping force,high reliability and stability.
- 2.Flimsy parts are shaped by quenching.
- 3.Self-tighting feature automatically increase gripping force proportional to increase torque to prevent tool shank slippage.



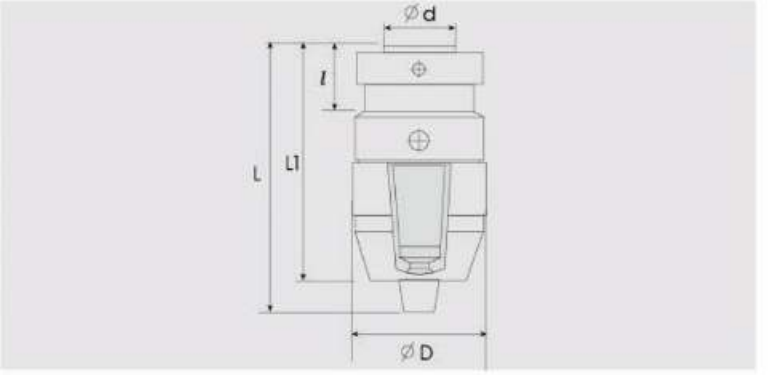

J01、02 SERIES MORSE、JACQUARD SHORT TAPER STOCK　　**J01、02系列 莫氏、贾格短锥连接**

工厂编号 Art.No	型 号 Model	夹持范围 Capacity mm	锥孔号 Tapering Hole Number	锥角 Taper	d mm	l mm	D mm	L(±1) mm	L1(±0.5) mm	Kg	检查棒 Check rod 大棒 Ø Big rod	检查棒 Check rod 小棒 mm Small rod	精度 Precision M级	精度 Precision P级	力距 N.M	报价 Unit Price
717023	J0104H-A	0.3-4 1/64" -5/32"	JT0	2° 49' 24.7"	6.350	11.112	29	60.8	55	-	4×45	-	0.05	0.08	1.2	
717024	J0106H-A	0.5-6	B10	2° 51' 26.7"	10.094	14.500	34	71.5	64	0.32	6×65	-			3	
717025	J0106H-A	1/64" -1/4"	JT1	4° 24' 53.1"	9.754	16.669										
717026	J0108H-A	0.5-8	B12	2° 51' 26.7"	12.065	18.500	43.6	91.5	82.2	0.50	8×80	-			4	
717027	J0108H-A	1/64" -5/16"	JT2	4° 40' 11.6"	14.199	22.225							0.05	0.10		
717028	J0110H-A	1-10	B12	2° 51' 26.7"	12.065	18.500	43.6	94.5	85.5	0.70	10×95	6×65			6	
717029	J0110H-A	1/32" -3/8"	JT2	4° 40' 11.6"	14.199	22.225										
717030	J0113H-A	1-13	B16	2° 51' 41.0"	15.733	24.000	51	103.5	92.5	0.96	13×105	6×65			12	
717031	J0113H-A	1/32" -1/2"	JT33	3° 38' 13.4"	15.850	25.400										
717032	J0116H-A	1-16	B18	2° 51' 41.0"	17.780	32.000	56.6	118	104	1.24	16×110	8×80	0.05	0.10	14	
717033	J0116H-A	1/32" -5/8"	JT6	2° 58' 24.8"	17.170	25.400										
717034	J0120H-A	5-20	B22	2° 52' 31.5"	21.793	40.500	59	130	118	1.70	20×120	10×95	0.05	0.10	16	
717035	J0120H-A	3/16" -3/4"	JT3	3° 3' 3"	20.599	30.956										

自紧式钻夹头　重 型
SELF-TIGHTEN CHUCK SYSTEM HEAVY DUTY

SAN OU CHUCK



适用范围：CNC加工中心。
特征：

- 1.具有高精度，高夹紧，高可靠性和稳定性。
- 2.易损部件淬火处理。
- 3.具有自紧功能，轻轻夹紧钻头即可，在钻孔中随着扭距的增加而同步增加夹持力，并能产生明显的高强度夹持力，从而防止钻头打滑。

Application: Recommended for CNC machining center.
Features:

- 1.High precision,and high gripping force,high reliability and stability.
- 2.Flimsy parts are shaped by quenching.
- 3.Self-tighting feature automatically increase gripping force proportional to increase torque to prevent tool shank slippage.



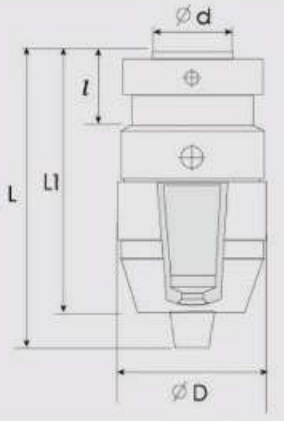

J01、02 SERIES MORSE、JACQUARD SHORT TAPER STOCK　　**J01、02系列 莫氏、贾格短锥连接**

工厂编号 Art.No	型 号 Model	夹持范围 Capacity mm	锥孔号 Tapering Hole Number	锥角 Taper	d mm	l mm	D mm	L(±1) mm	L1(±0.5) mm	Kg	检查棒 Check rod 大棒Ø Big rod	小棒 mm Small rod	精度 Precision M级	P级	力距 N.M	报价 Unit Price
977611	J0104H-P	0.3-4 1/64" -5/32"	JT0	2° 49' 24.7"	6.350	11.112	29	60.8	55	-	4×45	-	0.05	0.08	1.2	
977612	J0106H-P	0.5-6	B10	2° 51' 26.7"	10.094	14.500	34	71.5	64	0.32	6×65	-	0.05	0.10	3	
977613	J0106H-P	1/64" -1/4"	JT1	4° 24' 53.1"	9.754	16.669										
977614	J0108H-P	0.5-8	B12	2° 51' 26.7"	12.065	18.500	43.6	91.5	82.2	0.50	8×80	-	0.05	0.10	4	
977615	J0108H-P	1/64" -5/16"	JT2	4° 40' 11.6"	14.199	22.225										
977616	J0110H-P	1-10	B12	2° 51' 26.7"	12.065	18.500	43.6	94.5	85.5	0.70	10×95	6×65	0.05	0.10	6	
977617	J0110H-P	1/32" -3/8"	JT2	4° 40' 11.6"	14.199	22.225										
977618	J0113H-P	1-13	B16	2° 51' 41.0"	15.733	23.000	46.5	97	86	0.96	13×105	6×65	0.05	0.10	12	
977619	J0113H-P	1/32" -1/2"	JT33	3° 38' 13.4"	15.850	25.400										
977620	J0116H-P	1-16	B18	2° 51' 41.0"	17.780	32.000	56.6	118	104	1.24	16×110	8×80	0.05	0.10	14	
977621	J0116H-P	1/32" -5/8"	JT6	2° 58' 24.8"	17.170	25.400										
977622	J0120H-P	5-20	B22	2° 52' 31.5"	21.793	40.500	59	130	118	1.70	20×120	10×95	0.05	0.10	16	
977623	J0120H-P	3/16" -3/4"	JT3	3° 3' 1.0"	20.599	30.956										

自紧式带锁钻夹头 轻 型

SELF-TIGHTEN CHUCK WITH LOCKING SYSTEM LIGHT DUTY

SAN OU CHUCK



STYLE A

适用范围：适用于1050W以上的冲击钻及钻床。

特征：

- 1.具有自紧功能，轻轻夹紧钻头即可，在钻孔中随着扭距的增加而同步增加夹持力，并能产生明显的高强度夹持力，从而防止钻头打滑。
- 2.带有锁紧装置，确保夹头在作业中突然停止时不会被松开，也确保在反转作业中不会被松开。
- 3.具有高精度，高夹紧，高可靠性和稳定性。
- 4.易损部件淬火处理。
- 5.夹头可配有松开扳手，在夹紧力过紧时用扳手协助松开。



STYLE B

Application: It is suitable for over 1050W impacted power drills.

Features:

- 1.Self-tighting feature automatically increase gripping force proportion to increase torque to prevent tool shank slippage.
- 2.Positive lock mechanism prevents chucks from loosening in operation when suddenly stopped or in the reverse operation.
- 3.High precision,and high gripping force,high reliability and stability.
- 4.Flimsy parts are shaped by quenching.
- 5.The chuck can be attached with a loosed key.It can be used when the clamping force was too strong.



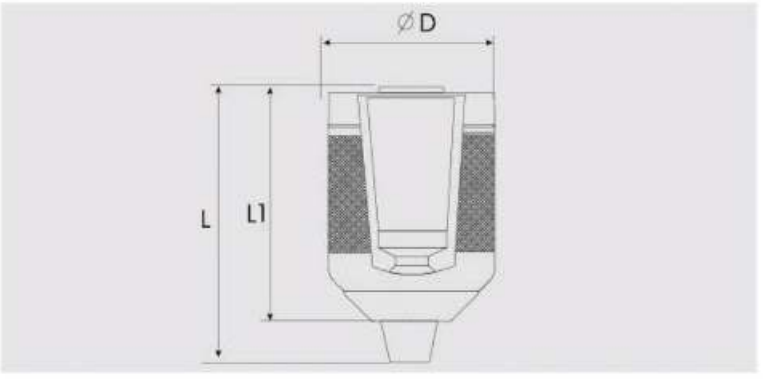

J01、02 SERIES MORSE、JACQUARD SHORT TAPER STOCK

J01、02系列 莫氏、贾格短锥连接

工厂编号 Art.No	型 号 Model	夹持范围 Capacity mm	夹持范围 Capacity Inch	连接尺寸 Mount	D mm	L(±1) mm	L1(±0.5) mm	Kg	检查棒 Check rod 大棒 Big rod	精度 Precision	报价 Unit Price
727616	J0513L-G	1-13	1/2	1/2-16UNF	42.5±0.5	78.5	68	0.28	13×105	0.20	

自紧式带锁钻夹头

SELF-TIGHTEN CHUCK WITH LOCK SYSTEM

SAN OU CHUCK



适用范围：适用于冲击钻及钻床。

特征：

- 1.具有自紧功能，轻轻夹紧钻头即可，在钻孔中随着扭距的增加而同步增加夹持力，并能产生明显的高强度夹持力，从而防止钻头打滑。
- 2.带有锁紧装置，确保夹头在作业中突然停止时不会被松开，也确保在反转作业中不会被松开。
- 3.具有高精度，高夹紧，高可靠性和稳定性。
- 4.易损部件淬火处理。
- 5.夹头可配有松开扳手，在夹紧力过紧时用扳手协助松开。

Application: Recommended for impact electric drills and drill machine.

Features:

- 1.Self-tighting feature automatically increase gripping force proportion to increase torque to prevent tool shank slippage.
- 2.Positive lock mechanism prevents chucks from loosening in operation when suddenly stopped or in the reverse operation.
- 3.High precision,and high gripping force,high reliability and stability.
- 4.Flimsy parts are shaped by quenching.
- 5.The chuck can be attached with a loosed key.It can be used when the clamping force was too strong.



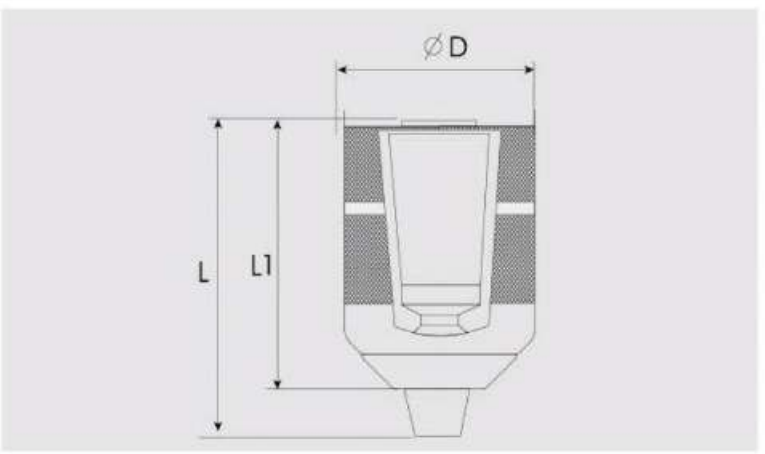

J01、02 SERIES MORSE、JACQUARD SHORT TAPER STOCK　　**J01、02系列 莫氏、贾格短锥连接**

工厂编号 Art.No	型 号 Model	夹持范围 Capacity mm	锥孔号 Tapering Hole Number	锥角 Taper	d mm	t mm	D mm	L(±1) mm	L1(±0.5) mm	Kg	检查棒 Check rod 大棒 Ø Big rod	小棒 mm Small rod	精度 Precision M级	P级	力距 N.M	报价 Unit Price
737616	J0113L-D	1-13	B16	2° 51' 41.0"	15.733	24.000	42.5	81	71	0.96	13×105	6×65	0.05	0.10		

自紧式钻夹头　重 型
SELF-TIGHTEN CHUCK SYSTEM HEAVY DUTY

SAN OU CHUCK



适用范围：CNC加工中心。

特征：

- 1.带有锁紧装置，确保夹头在作业中突然停止时不会被松开，也确保在反转作业中不会被松开。可替代丝攻夹头用。
- 2.具有高精度，高夹紧，高可靠性和稳定性。
- 3.易损部件淬火处理。
- 4.夹头可配有松开扳手，在夹紧力过紧时用扳手协助松开。

Application: Recommended for CNC machining center.

Features:

- 1.Positive lock mechanism prevents chucks from loosening in operation when suddenly stopped or in the reverse operation. Can instead of taper chuck.
- 2.High precision,and high gripping force,high reliability and stability.
- 3.Flimsy parts are shaped by quenching.
- 4.The chuck can be attached with a loosed key.It can be used when the clamping force was too strong.



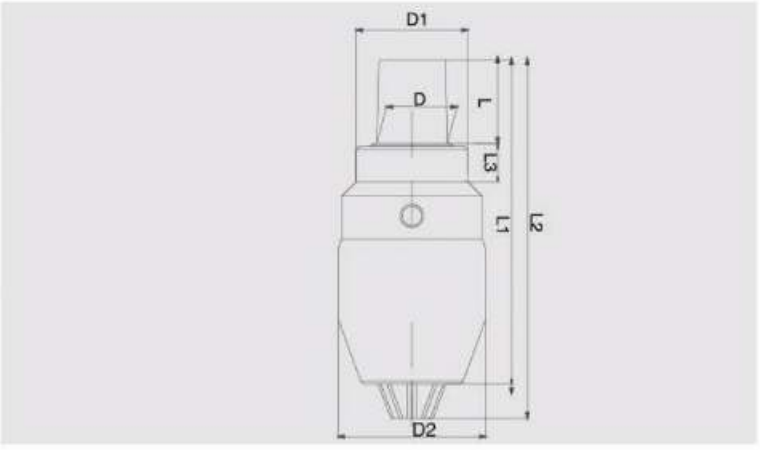

工厂编号 Art.No	型 号 Model	夹持范围 Capacity mm	夹持范围 Capacity Inch	连接尺寸 Mount	D mm	D1 mm	D2 mm	L1 mm	L mm	Kg	检查棒 Check rod 大棒 Big rod	检查棒 Check rod 小棒 mm Small rod	精度 Precision M级	精度 Precision P级	力距 N.M	报价 Unit Price
971321	J0613H-B	1-13	1/32-1/2	MT3	24.051	38.5	51±0.5	107±0.5	118±1	1.00	13×105	6×65	0.05	0.10	12	
971322	J0614H-B	1-13	1/32-1/2	MT3	24.051	38.5	51±0.5	107±0.5	118±1	1.00	13×105	6×65	0.05	0.10	12	
971323	J0615H-B	1-13	1/32-1/2	MT3	24.051	38.5	51±0.5	107±0.5	118±1	1.00	13×105	6×65	0.05	0.10	12	
971324	J0616H-B	1-13	1/32-1/2	MT3	24.051	38.5	51±0.5	107±0.5	118±1	1.00	13×105	6×65	0.05	0.10	12	



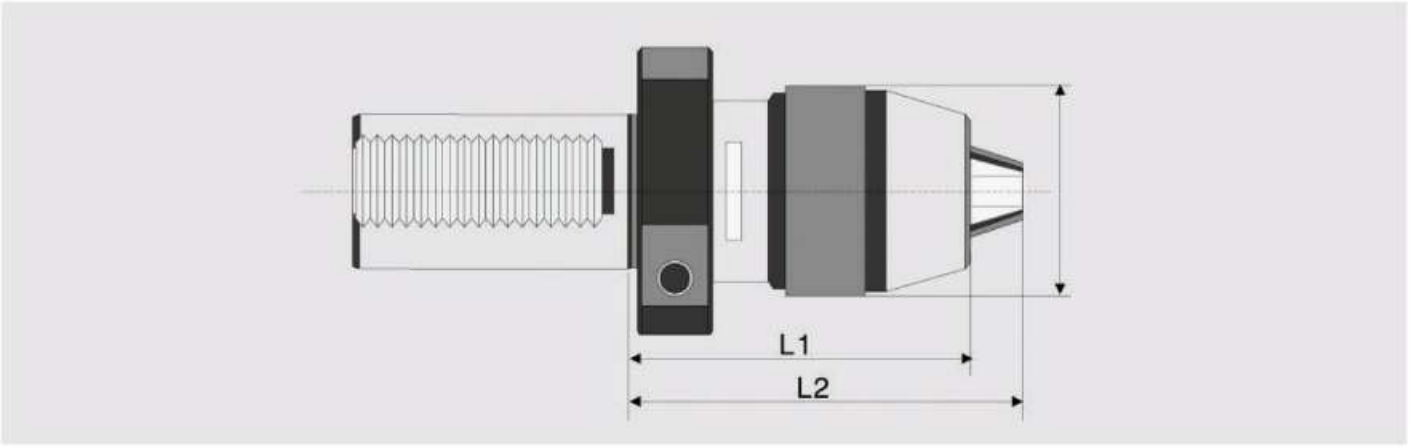

工厂编号 Art.No	型 号 Model	夹持范围 Capacity mm	Pulgadas	Fijacion ISO	Dimensiones Ø	L1	L2	Peso kgs.	报价 Unit Price
801103	J0708	0-8	0-5/16 ″	30	38	72	79	1.85	
802103	J0713	1-13	1/32 ″ -1/2 ″	30	48	94	105	2.10	
802203	J0713	1-13	1/32 ″ -1/2 ″	40	48	85	92	2.40	
803203	J0716	3-16	1/8 ″ -5/8 ″	40	55	85	96	2.60	
803303	J0716	3-16	1/8 ″ -5/8 ″	50	55	87	98	3.65	
803403	J0716	3-16	1/8 ″ -5/8 ″	60	55	87	98	5.40	

CNC高精密自紧夹头
CNC SELF-TIGHTEN CHUCK



STYLE A



STYLE B

适用范围：CNC加工中心。

特征：

- 1.高精密莫氏圆锥连接。
- 2.科学的设计,避免接杆与夹头连接的误差。
- 3.具有高精度，高夹紧，高可靠性和稳定性。
- 4.易损部件淬火处理。
- 5.具有自紧功能，轻轻夹紧钻头即可，在钻孔中随着扭距的增加而同步增加夹持力，并能产生明显的高强度夹持力，从而防钻头打滑。

Application: Recommended for CNC machining center.

Features:

- 1.High precision morse taper.
- 2.This integrated design makes it impossible for the arbor and the drill chuck to become accidentally separated.
- 3.High precision and high gripping force,high reliability and stability.
- 4.Flimsy parts are shaped by quenching.
- 5.Self-tighting feature automatically increase gripping force proportional to increased torque to prevent tool shank slippage.



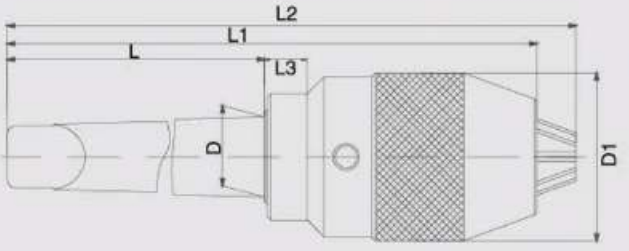

工厂编号 Art.No	型号 Model	夹持范围 mm	Capacity Inch	尺寸 Dimensione D1(±0.5mm) L	1(±0.5)	L2(±1)	L	D	报价 Unit Price
811106	MT1-08	0-8	0-5/16"	-	-	-	-	-	
821106	MT1-10	1.0-10	1/32"-3/8"	-	-	-	-	-	
811124	MT2-08	0-8	0-5/16"	36	122.5	131	63	17.780	
821124	MT2-10	1.0-10	1/32"-3/8"	43.5	136	145	63	17.780	
831124	MT2-13	1.0-13	1/32-1/2	51	163	174	63	17.780	
831123	MT3-13	1.0-13	1/32-1/2	51	181	192.5	99.5	23.825	
841123	MT3-16	1.0-16	1/32-5/8	56.5	192	207	99.5	23.825	
831126	MT4-13	1.0-13	1/32-1/2	51	207	218.5	125	31.542	
841126	MT4-16	1.0-16	1/32-5/8	56.5	219	234.5	125	31.542	

CNC高精密自紧夹头
CNC SELF-TIGHTEN CHUCK



适用范围：CNC加工中心。

特征：

- 1.高精密直柄连接。
- 2.连接杆和夹头整合的设计，防止夹头和接杆意外地被分离。
- 3.具有高精度，高夹紧，高可靠性和稳定性。
- 4.易损部件淬火处理。
- 5.具有自紧功能，轻轻夹紧钻头即可，在钻孔中随着扭距的增加而同步增加夹持力，并能产生明显的高强度夹持力，从而防钻头打滑。

Application: Recommended for CNC machining center.

Features:

- 1.High precision straight shank.
- 2.This integrated design makes it impossible for the arbor and the drill chuck to become accidentally separated.
- 3.High precision and high gripping force,high reliability and stability.
- 4.Flimsy parts are shaped by quenching.
- 5.Self-tighting feature automatically increase gripping force proportional to increased torque to prevent tool shank slippage.



适用范围：CNC加工中心。

特征：

- 1.高精密R8连接。
- 2.连接杆和夹头整合的设计，防止夹头和接杆意外地被分离。
- 3.具有高精度，高夹紧，高可靠性和稳定性。
- 4.易损部件淬火处理。
- 5.具有自紧功能，轻轻夹紧钻头即可，在钻孔中随着扭距的增加而同步增加夹持力，并能产生明显的高强度夹持力，从而防钻头打滑。

Application: Recommended for CNC machining center.

Features:

- 1.High precision R8 shank.
- 2.This integrated design makes it impossible for the arbor and the drill chuck to become accidentally separated.
- 3.High precision and high gripping force,high reliability and stability.
- 4.Flimsy parts are shaped by quenching.
- 5.Self-tighting feature automatically increase gripping force proportional to increased torque to prevent tool shank slippage.



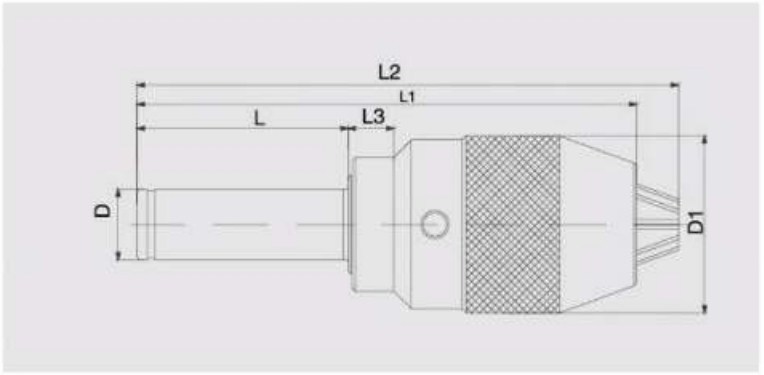

工厂编号 Art.No	型号 Model	夹持范围 mm	Capacity Inch	尺寸 Dimensione D1(±0.5mm) L	1(±0.5)	L2(±1)	L	D	报价 Unit Price
831120	C20-13	1.0-13	1/32-1/2	51	143	155.5	60	20	
841120	C20-16	1.0-16	1/32-5/8	56.5	153	167.5	60	20	
831119	C25-13	1.0-13	1/32-1/2	51	162	174	80	25	
841119	C25-16	1.0-16	1/32-5/8	56.5	173	187.5	80	25	
831118	C32-13	1.0-13	1/32-1/2	51	162	174	80	32	
841118	C32-16	1.0-16	1/32-5/8	56.5	173	187.5	80	32	
831117	C42-13	1.0-13	1/32-1/2	51	162	174	80	42	
841117	C42-16	1.0-16	1/32-5/8	56.5	173	187.5	80	42	
831122	R8-13	1.0-13	1/32-1/2	51	183.5	195	102	31.75	
841122	R8-16	1.0-16	1/32-5/8	56.5	195	210	102	31.75	

CNC高精密自紧夹头
CNC SELF-TIGHTEN CHUCK



STYLE A

STYLE B

适用范围：CNC加工中心。

特征：

- 1.高精密莫式圆锥和R-8连接。
- 2.连接杆和夹头整合的设计，防止夹头和接杆意外地被分离。
- 3.具有高精度，高夹紧，高可靠性和稳定性。
- 4.易损部件淬火处理。
- 5.具有自紧功能，轻轻夹紧钻头即可，在钻孔中随着扭距的增加而同步增加夹持力，并能产生明显的高强度夹持力，从而防钻头打滑。

Application: Recommended for CNC machining center.

Features:

- 1.High precision R8 shank.
- 2.This integrated design makes it impossible for the arbor and the drill chuck to become accidentally separated.
- 3.High precision and high gripping force,high reliability and stability
- 4.Flimsy parts are shaped by quenching.
- 5.Self-tighting feature automatically increase gripping force proportional to increased torque to prevent tool shank slippage



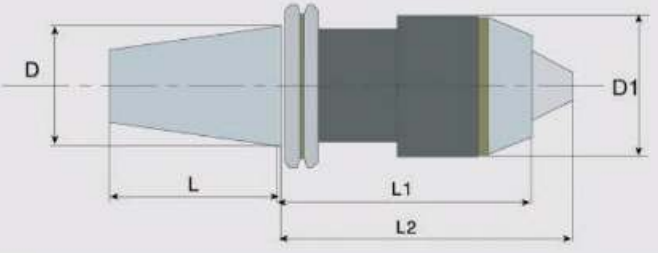

工厂编号 Art.No	型号 Model	夹持范围 mm	Capacity Inch	Fijacion BT	尺寸 Dimensione D1	L1	L2	L	D	后端连接螺纹 mounting thred UNC-2B
811107	BT30-08	0-8	0-5/16"	30	36	78	86.5	48.4	31.75	M12
811108	BT40-08	0-8	0-5/16"	40	36	78	87	65.4	44.45	M16
821108	BT40-10	1.0-10	1/32"-3/8"	40	43.5	92	103	65.4	44.45	M16
831108	BT40-13	1.0-13	1/32-1/2"	40	51	107	121	65.4	44.45	M16
841108	BT40-16	3.0-16	1/8-5/8"	40	57	115	130	65.4	44.45	M16
831109	BT45-13	1.0-13	1/32-1/2"	45	51	107.5	119.5	82.8	57.15	M20
831110	BT50-13	1.0-13	1/32-1/2"	50	51	112.5	124.5	101.8	69.85	M24
841110	BT50-16	3.0-16	1/8-5/8"	50	57	122	136	101.8	69.85	M24

CNC高精密自紧夹头
CNC SELF-TIGHTEN CHUCK



适用范围：CNC加工中心。

特征：

- 1.高精密莫式短锥。
- 2.连接杆和夹头整合的设计，防止夹头和接杆意外地被分离。
- 3.具有高精度，高夹紧，高可靠性和稳定性。
- 4.易损部件淬火处理。
- 5.具有自紧功能，轻轻夹紧钻头即可，在钻孔中随着扭距的增加而同步增加夹持力，并能产生明显的高强度夹持力，从而防钻头打滑。

Application: Recommended for CNC machining center.

Features:

- 1.High precision morse taper.
- 2.This integrated design makes it impossible for the arbor and the drill chuck to become accidentally separated.
- 3.High precision and high gripping force,high reliability and stability.
- 4.Flimsy parts are shaped by quenching.
- 5.Self-tighting feature automatically increase gripping force proportional to increased torque to prevent tool shank slippage.



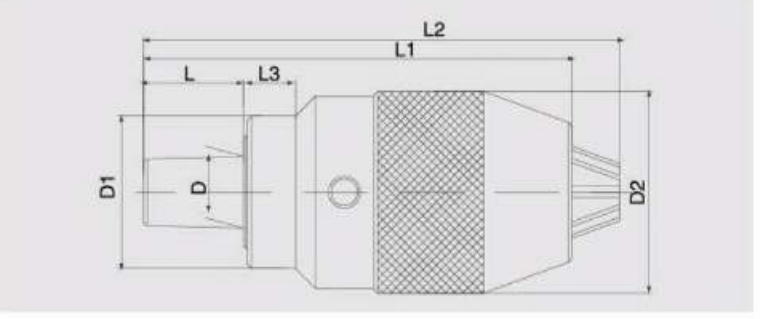

工厂编号 Art.No	型号 Model	夹持范围 mm	Capacity Inch	尺寸 Dimensione D1(±0.5)	L1(±0.5)	L2(±1)	L	D	报价 Unit Price
811105	MT1-08-D	0-8	0-5/16"	-	-	-	-	-	
821105	MT1-10-D	1.0-10	1/32"-3/8"	-	-	-	-	-	
811127	MT2-08-D	0-8	0-5/16"	36	84.5	93	25	17.780	
821127	MT2-10-D	1.0-13	1/32-1/2	43.5	95.5	108	25	17.780	
831127	MT2-13-D	1.0-16	1/32-5/8	51	107	114.5	25	17.780	
831125	MT3-13-D	1.0-13	1/32-1/2	51	108.5	120	26.5	23.825	
841125	MT3-16-D	1.0-16	1/32-5/8	56.5	114.5	126	26.5	23.825	
831128	MT4-13-D	1.0-13	1/32-1/2	51	109	121	26.5	31.267	
841128	MT4-16-D	1.0-16	1/32-5/8	56.5	120	134.5	26.5	31.267	

丝锥夹头 两爪木工夹头
TAPPING CHUCK 2- JAW TAPPING CHUCK



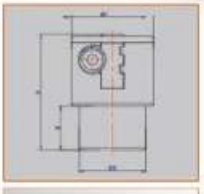



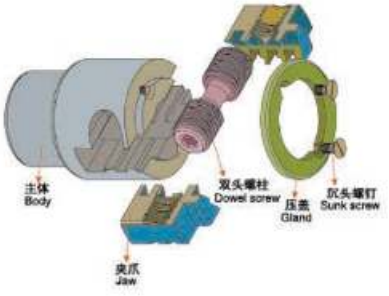

特征：

- 1.集钻孔与攻丝一体，结构独特，一件多用。
- 2.只需旋转前套，即可钻孔。
- 3.不同丝锥直径，只需调节前套即可得到理想效果，节约辅助时间。

Features:

- 1. Compose drill chuck and tapping chuck together, special inner structure,multi-purpose.
- 2. Only need to rotate front sleeve to drill holes.
- 3. Only need to regulate front sleeve to match different diameter tapping aiguille and get perfect results, save assistant time.

连接尺寸 Mount	攻牙能力 Capacity	报价 Unit Price
B16	M3-M12	
B18	M3-M12	



MORSE JACQUARD MOUNT **莫氏\贾各锥度连接**

工厂编号 Art.No	型 号 Model	夹持范围 mm	Capacity Inch	连接尺寸 Mount	A mm	B mm	C mm	D mm	报价 Unit Price
900201	J9210	0-10	1/32" -3/8"	JT2	55	23	43.5	33	
900401	J9210	0-10	1/32" -3/8"	JT33	55	23	43.5	33	
900701	J9210	0-10	1/32" -3/8"	JT6	55	23	43.5	33	
901301	J9213	0-13	1/32" -1/2"	JT3	62	24	48	38	
901701	J9213	0-13	1/32" -1/2"	JT6	62	24	48	38	
912301	J9113	0-13	1/32" -1/2"	B18	62	24	48	41	
902701	J9216	1-16	1/32" -5/8"	JT6	71	27.5	51	41	
902301	J9216	1-16	1/32" -5/8"	JT3	71	27.5	51	41	
903301	J9116	1-16	1/32" -5/8"	B18	71	27.5	51	41	
914401	J9120	1-20	1/32" -3/4"	B18	76	23	61	50	
914301	J9120	1-20	1/32" -3/4"	B22	83	30	61	50	
903301	J9220	1-20	1/32" -3/4"	JT3	76	23	61	50	
915401	J9125	1-25	1/32" -1"	B22	93	35	73	53	

锥柄丝锥夹头
TAPER SHANK TAPPING CHUCK



连接尺寸 Mount	攻牙能力	报价 Unit Price
MT3	M3-M12	
MT3	M12-M24	
MT4	M12-M24	
MT5	M24-M42	

卡盘扳手
LATHE CHUCK WRENCH

SAN OU CHUCK



单花	报价 Unit Price



手柄滚花	报价 Unit Price



格纹	报价 Unit Price



六角	报价 Unit Price



条纹	报价 Unit Price



直纹	报价 Unit Price



弹簧扳手	报价 Unit Price
SPRING KEY	



自紧式扳手	报价 Unit Price
SELF-TIAHTEN CHUCK KEY	

外型仅供参考 Various packing for chosing



AC Old packing/老款包装



S Old packing/老款包装



AA New packing/新款包装



AE New packing/新款包装



R Harvset packing/丰收包装



G SangGang packing/三钢包装

外型仅供参考 Various packing for chosing



YG 薄型高速中空回转油缸
High speed compact hollow
Rotary hydraulic cylinders



DK μm级超精动力卡盘



GJ 高精度卡盘
Pro high-precision chuck



PA SAN OU packing/三鸥牌卡盘包装

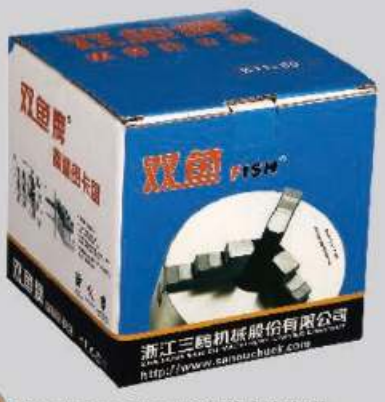

PX Two fish packing/双鱼牌卡盘包装



PY SanGang packing/三钢牌卡盘包装



PC SAN OU packing/三鸥牌卡盘包装



PD Two fish packing/双鱼牌卡盘包装



PE SanGang packing/三钢牌卡盘包装

外型仅供参考 Various packing for chosing



PM Harvest packing/丰收牌卡盘包装



PN Harvest packing/丰收牌卡盘包装



PK SAN OU packing/三鸥牌卡盘包装



PH SAN OU packing/三鸥牌卡盘包装



PF SAN OU packing/三鸥牌卡盘包装



PG SAN OU packing/三鸥牌卡盘包装

外型仅供参考 Various packing for chosing



PI SAN OU packing/三鸥牌卡盘包装



PJ Jaws packing/卡爪包装



Key packing/扳手包装



AO Keyless chuck packing/自紧包装



BG



BH



BE



BF



Y

SANOU | Micro

5μm级超精动力卡盘

SUPER PRECISION POWER CHUCK

■颠覆性的μm级精度 ■50万次稳定高精度夹持

替代进口 为国争光



三鸥夹持科技 Sanou Chucknology

与世界工业同步 Synchronize with world industry

浙江三鸥机械股份有限公司 ZHEJIANG SAN OU MACHINERY LIMITED COMPANY

www.sanouchuck.com



电话（TEL）：86-576-82122222

传真（FAX）：86-576-82512198

http://www.sanouchuck.com

E-mail:sanou@sanouchuck.com

地址：浙江省台州市路桥区永长路

ADD：yongchang Road,Luqiao, Taizhou, Zhejiang, P. R. China

样本中的产品数据和实物如有变更，本公司不便另行通知，请谅解！如果产品图片与实物不符，以实物为准。

If any revision of the technical data and pictures in the catalogue, excuse us not giving further notice.

Please refer to the sample if there is difference between the picture and sample.

本公司样本中很多产品均已申请专利,请勿模仿。

Some of our products in the catalogue have already patented,please don't imitate.

CATALOGUE

2024·10

鹏眼設計 13073869866